ICE MAKER

Shelf-Contained Nugget

Service Manual

IU-0090-AN
IU-0090-ANP
IU-0090-ANA
IU-0090-ANAP

ICETRO

Ver 1.0 (2022.5.17)

⚠ CAUTION

This manual should be read carefully before the appliance is serviced. Read the warnings and guidelines contained in this manual carefully as they provide essential information for the continued safe use, service, and maintenance of the appliance. Retain this manual for any further reference that may be necessary.

CONTENTS

Important Safety Information ----------3
I. General Information ----------5
1. Product Construction ----------5
2. Ice Making Assembly ----------6
3. Water and Refrigeration Circuit ----------7

II. Sequence of Operation and Service Diagnosis ----------8
1. Sequence of Operation Flow Chart ----------8
2. Service Diagnosis ----------9
A. Ice Production Check ----------9
B. Diagnostic Procedure ----------9
3. Water Level Sensor Check and Cleaning ----------12
A. Water Level Sensor Check ----------12
B. Water Level Sensor Cleaning ----------12
4. Optional Drain Pump ----------14
A. Overview ----------14
B. Drain Pump Check ----------14
5. Diagnostic Tables ----------15

III. Control and Relays ----------17
1. Operation Switch ----------17
2. Time Delay Relay ----------17
3. Water Control Relay ----------17

IV. Refrigeration Circuit and Component Service Information ----------18
1. Refrigeration Circuit Service Information ----------18
2. Component Service Information ----------20
A. Upper Bearing Wear Check ----------22
B. Removal and Replacement of Extruding Head ----------23
C. Removal and Replacement of Auger ----------24
D. Removal and Replacement of Evaporator ----------24
E. Removal and Replacement of Mechanical Seal and Lower Housing ----------26
F. Removal and Replacement of Gear Motor ----------27

V. Maintenance ----------28
1. Maintenance Schedule ----------29

VI. Preparing the Appliance for Periods of Non-Use ----------30

VII. Technical Information ----------31
1. Specifications ----------31
2. Wiring Diagrams ----------32
3. Optional Drain Pump Wiring Diagrams ----------33
4. Error Type ----------34

Important Safety Information

Throughout this manual, notices appear to bring your attention to situations which could result in death, serious injury, damage to the appliance, or damage to property.

⚠WARNING Indicates a hazardous situation which could result in death or serious injury.

⚠CAUTION Indicates a situation which could result in damage to the appliance or property.

⚠WARNING

The appliance should be destined only to the use for which it has been expressly conceived. Any other use should be considered improper and therefore dangerous. The manufacturer cannot be held responsible for injury or damage resulting from improper, incorrect, and unreasonable use. Failure to service and maintain the appliance in accordance with this manual will adversely affect safety, performance, component life, and warranty coverage and may result in costly water damage.

To reduce the risk of death, electric shock, serious injury, or fire, follow basic precautions including the following:

- Only qualified service technicians should install and service the appliance.
- The appliance must be installed in accordance with applicable national, state, and local codes and regulations.
- The appliance requires an independent power supply of proper capacity. See the nameplate for electrical specifications. Failure to use an independent power supply of proper capacity can result in a tripped breaker, blown fuse, damage to existing wiring, or component failure. This could lead to heat generation or fire.

- **THE APPLIANCE MUST BE GROUNDED:** The appliance is equipped with a NEMA 5-15 three-prong grounding plug to reduce the risk of potential shock hazards. It must be plugged into a properly grounded, independent 3-prong wall outlet. If the outlet is a 2-prong outlet, it is your personal responsibility to have a qualified electrician replace it with a properly grounded, independent 3-prong wall outlet. Do not remove the ground prong from the power cord and do not use an adapter plug. Failure to properly ground the appliance could result in death or serious injury.
- Do not use an extension cord.
- To reduce the risk of electric shock, do not touch the control switch or plug with damp hands. Make sure the control switch is in the "OFF" position before plugging in or unplugging the appliance.
- Do not use an appliance with a damaged power cord. The power cord should not be altered, jerked, bundled, weighed down, pinched, or tangled. Such actions could result in electric shock or fire. To unplug the appliance, be sure to pull the plug, not the cord, and do not jerk the cord.
- Do not make any alterations to the appliance. Alterations could result in electric shock, injury, fire, or damage to the appliance.

⚠ WARNING

- Do not place fingers or any other objects into the ice discharge opening.
- The appliance is not intended for use by persons (including children) with reduced physical, sensory, or mental capabilities, or lack of experience and knowledge, unless they have been given supervision or instruction concerning use of the appliance by a person responsible for their safety.
- Young children should be properly supervised around the appliance.
- Do not climb, stand, or hang on the appliance or appliance door or allow children or animals to do so. Serious injury could occur or the appliance could be damaged.
- Be careful not to pinch fingers when opening and closing the door. Be careful when opening and closing the door when children are in the area.
- Do not use combustible spray or place volatile or flammable substances near the appliance. They might catch fire.
- Keep the area around the appliance clean. Dirt, dust, or insects in the appliance could cause harm to individuals or damage to the appliance.

⚠ CAUTION

- Protect the floor when moving the appliance to prevent damage to the floor.
- Follow the water supply, drain connection, and maintenance instructions carefully to reduce the risk of costly water damage.
- In areas where water damage is a concern, install in a contained area with a floor drain.
- Install the appliance in a location that stays above freezing. Normal operating ambient temperature must be within 50°F to 100°F (10°C to 38°C).
- If using the optional drain pump, test its operation every time the appliance is cleaned and sanitized. See "II.5.B. Drain Pump Check" for details. If the optional drain pump is not operating properly, water could back up and overflow, leading to costly water damage.
- If water collects in the bin and will not drain, turn off the appliance and close the water supply line shut-off valve. Locate and resolve the issue.
- To help ensure that the storage bin drain remains clear, follow the storage bin drain instructions in the instruction manual once every 3 months or as often as necessary for conditions. If the storage bin drain becomes clogged, water could build up in the bin and overflow, leading to costly water damage.
- If water seeps from the base of the appliance, turn off the appliance and close the water supply line shut-off valve. Locate and resolve the issue. Failure to do so could lead to costly water damage.
- Do not leave the appliance on during extended periods of non-use, extended absences, or in sub-freezing temperatures. To properly prepare the appliance for these occasions, follow the instructions in "VI. Preparing the Appliance for Periods of Non-Use."
- Keep ventilation openings, in the appliance enclosure or in the built-in structure, clear of obstruction.
- Do not place objects on top of the appliance.
- The storage bin is for ice use only. Do not store anything else in the storage bin.

Ⅰ. General Information

1. Product Construction

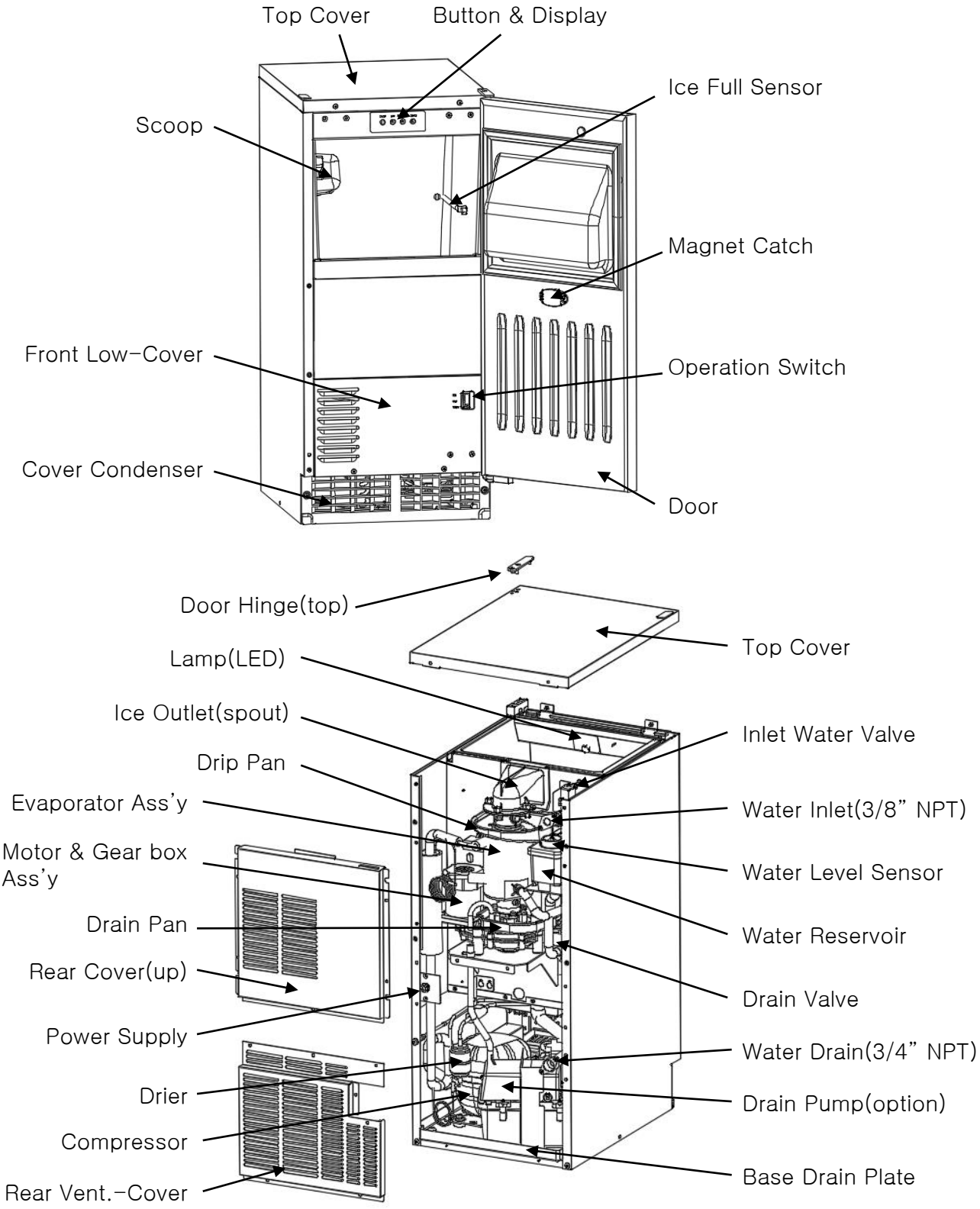

2. Ice Making Assembly

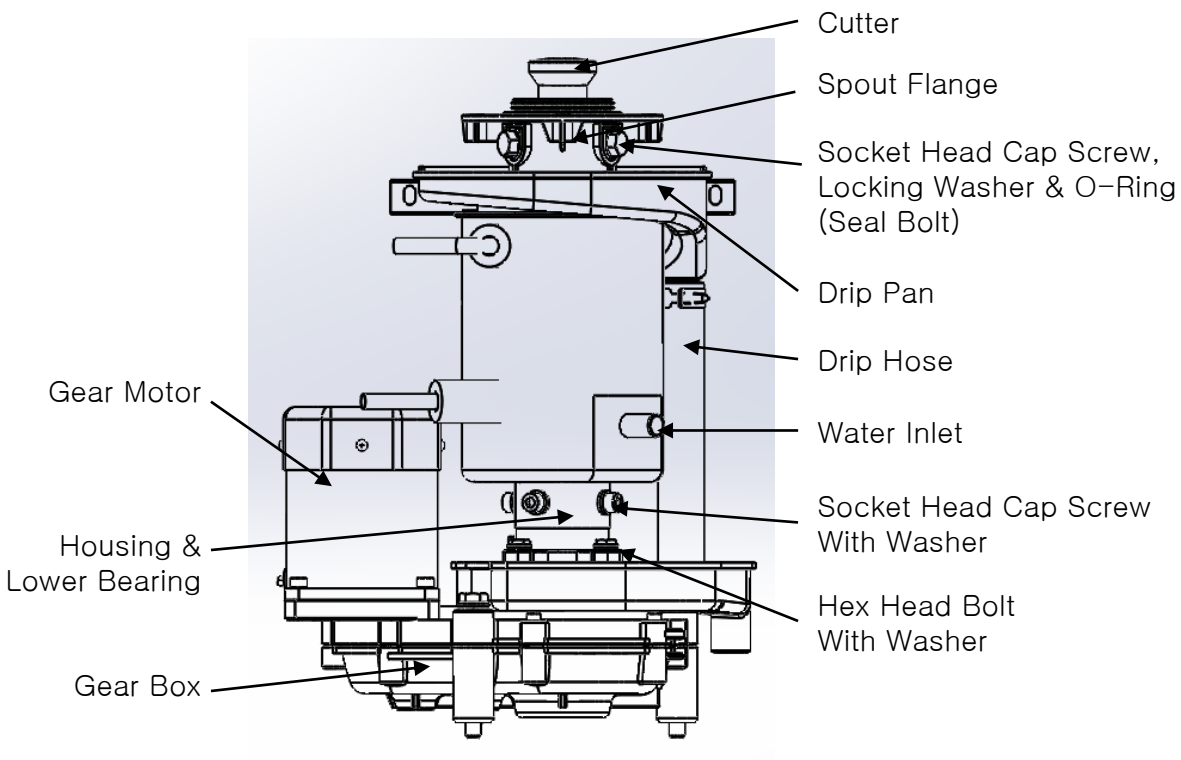

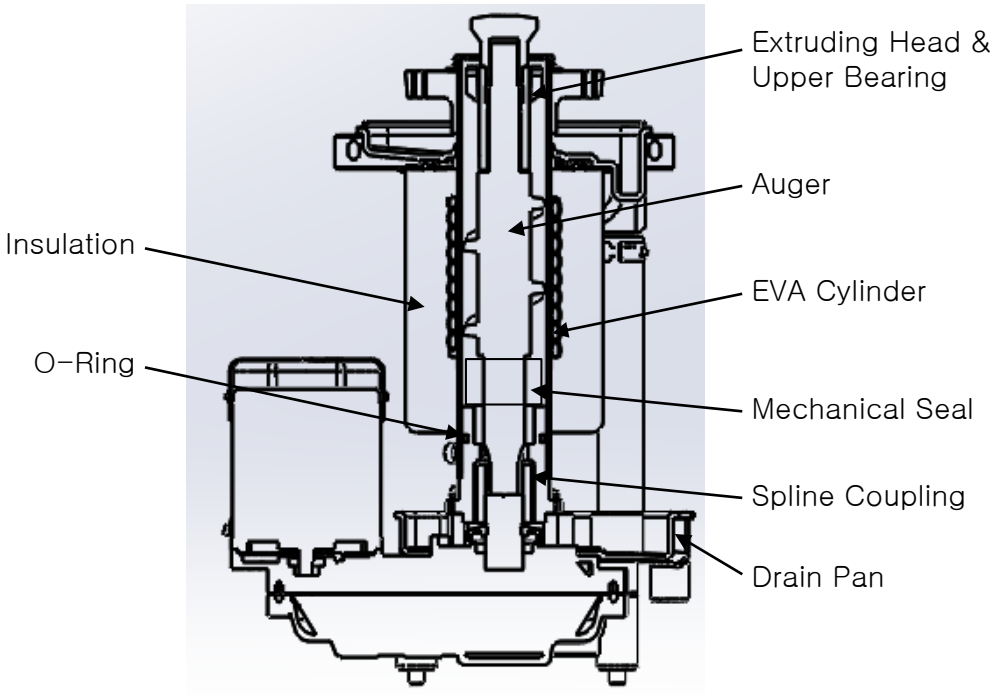

3. Water and Refrigeration Circuit

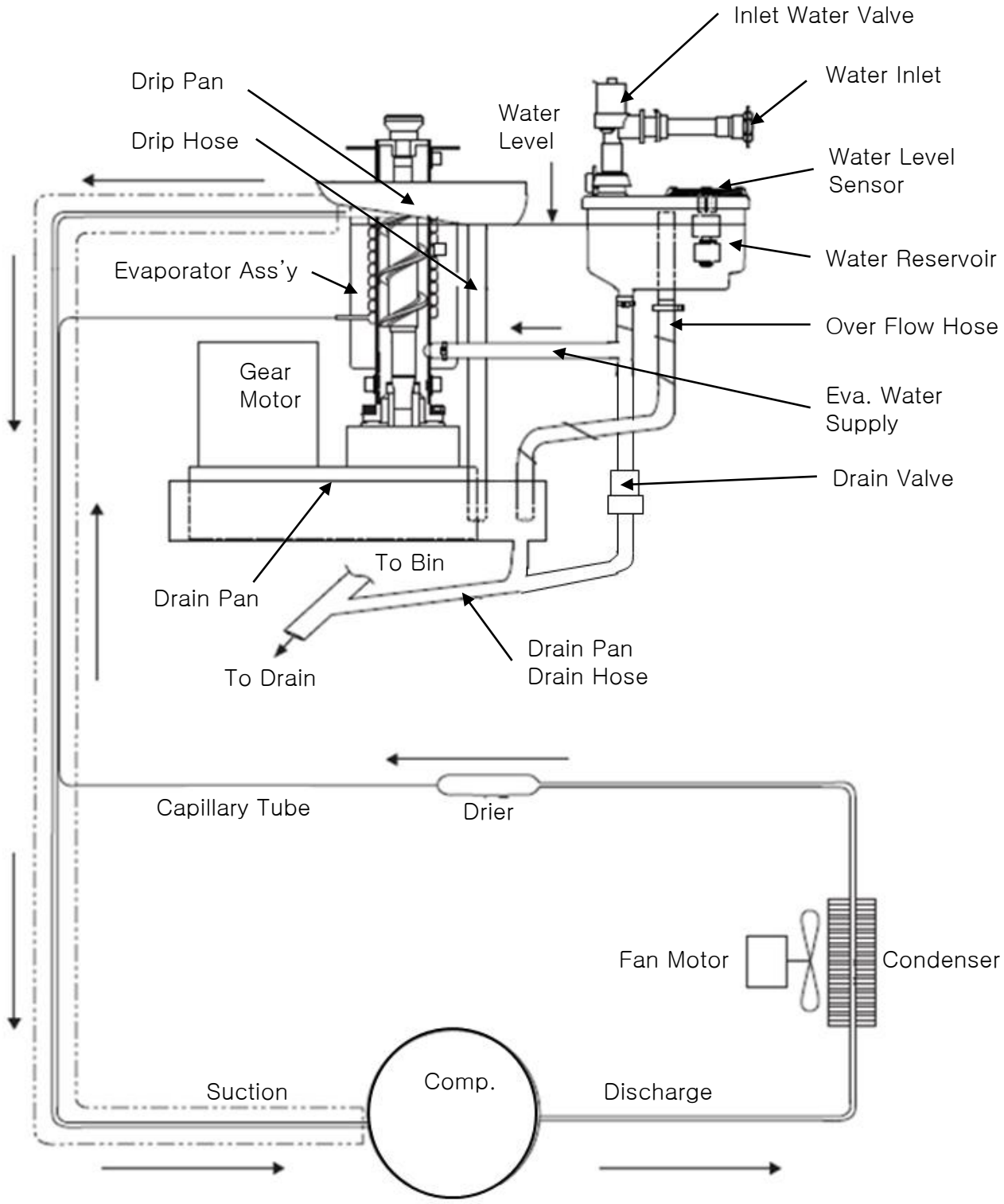

II. Sequence of Operation and Service Diagnosis

1. Sequence of Operation Flow Chart

[ICE MAKING PROCEDURE]

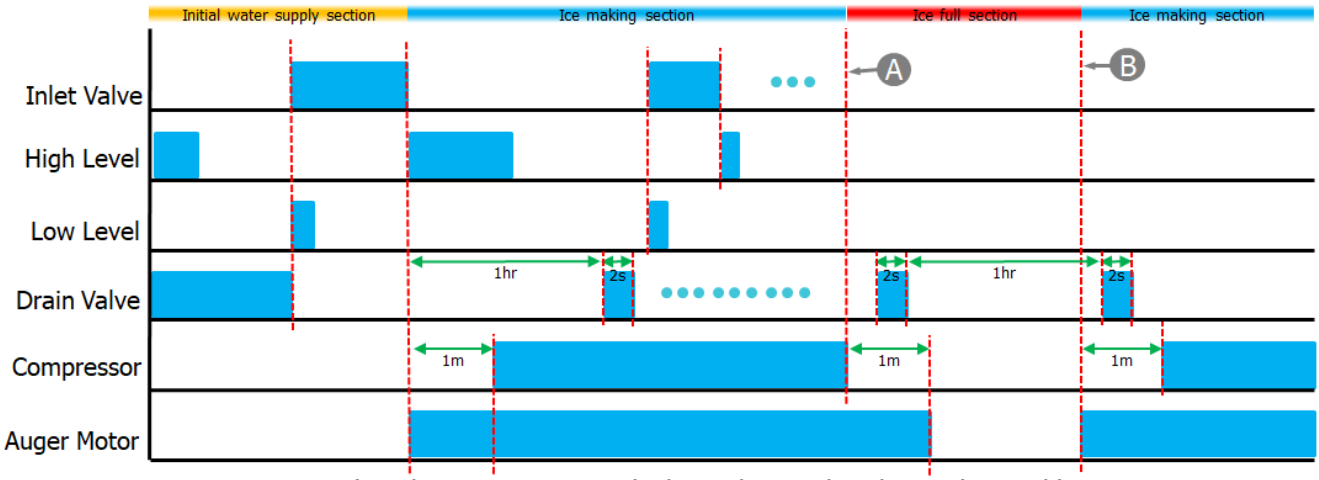

A : Stop operation when the temperature inside the ice bin reaches the condition table
B : When the internal temperature of the ice bin reaches the condition table, restart the ice maker.

	Air sensor	Ice full condition	Restart condition
Ice bin full condition table	7°C(45°F) below	1.5°C	2.0°C
	7°C(45°F) over ~ 14°C(57°F) below	1.5°C	2.5°C
	14°C(57°F) over ~ 24°C(75°F) below	2.0°C	3.5°C
	24°C(75°F) over ~ 34°C(93°F) below	2.5°C	4.5°C
	34°C(93°F) over	3.0°C	5.0°C

[WASH PROCEDURE]

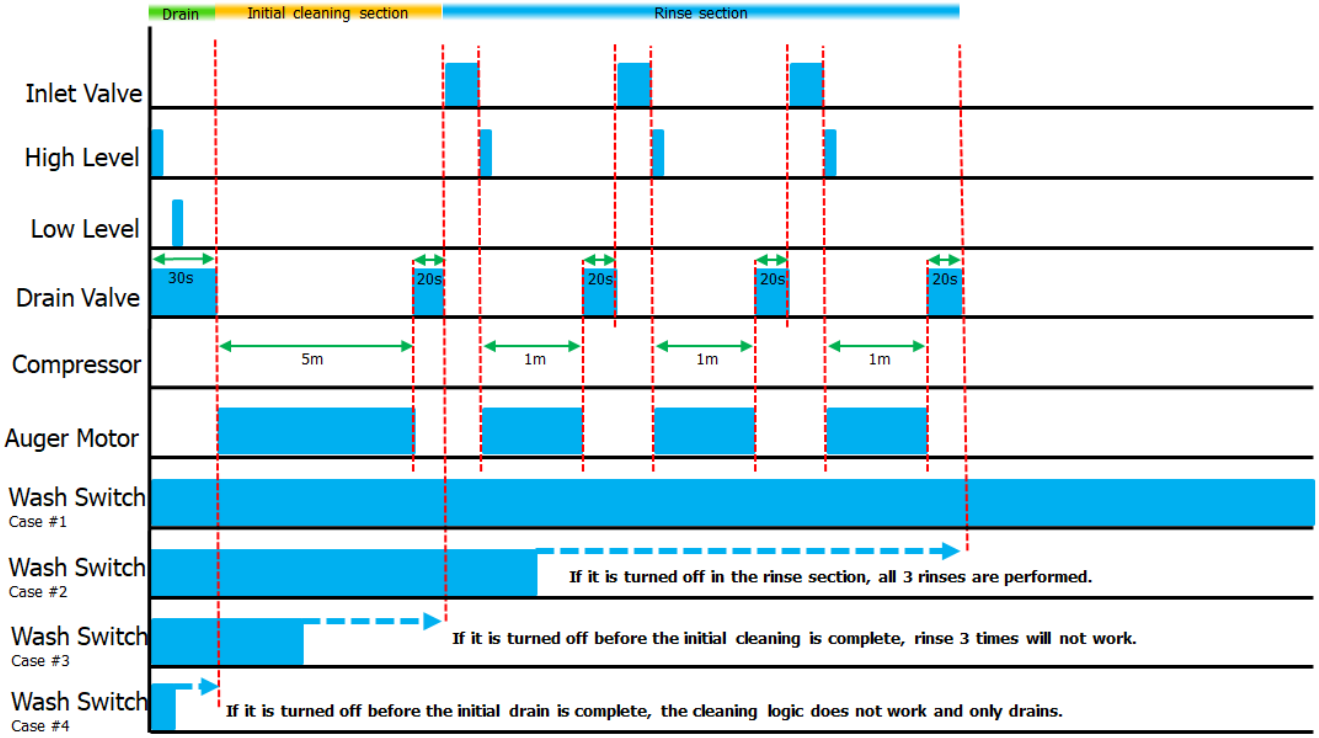

2. Service Diagnosis

⚠ WARNING

- This appliance should be diagnosed and repaired only by qualified service personnel to reduce the risk of death, electric shock, serious injury, or fire.
- Risk of electric shock. Use extreme caution and exercise safe electrical practices.
- Moving parts (e.g., fan blade) can crush and cut. Keep hands clear.
- CHOKING HAZARD: Ensure all components, fasteners, and thumbscrews are securely in place after the appliance is serviced. Make sure that none have fallen into the storage bin.
- Make sure all food zones in the appliance and storage bin are clean after service.
- After service, make sure that there are no wires pinched between the panels and icemaker. Make sure you do not damage or pinch the water supply line, drain line, or power cord.

A. Ice Production Check

To check production, prepare a bucket or pan to catch the ice and a set of scales to weigh the ice. After the appliance has operated for 10 to 20 minutes, catch the ice production for 10 minutes. Weigh the ice to establish the batch weight. Multiply the batch weight by 144 for the total production in 24 hours.

B. Diagnostic Procedure

This diagnostic procedure is a sequence check that allows you to diagnose the electrical system and components. Before proceeding, check for correct installation, proper voltage per appliance nameplate, and adequate water pressure (20 to 80 PSIG).
Note: • When checking high voltage (115VAC), always choose a white (W) neutral wire to establish a good neutral connection.
• The water supply and drain valves are operated by the upper and lower limit sensors of the float switch. Watering should be done within 120 seconds.
• Optional drain pump has 115VAC power supply as soon as the appliance is plugged into the electrical outlet.

1) Confirm the appliance is plugged into the electrical outlet, supply voltage is correct per nameplate.
2) Move the operation switch to the “WASH" position. It works according to the "WASH PROCEDURE" mentioned on the previous page. In order to drain only the water from the ice maker, operate the switch to “Wash” and then turn it “OFF” in the middle of draining.

3) When the water is drained, unplug the ice maker.
4) Remove the front low-cover, cover-condenser, and upper and lower rear covers.
5) Remove the screws securing the control box, then gently pull out the control box and secure it in a safe position. Remove the control box cover.
6) Plug the appliance back into the electrical outlet.

7) Water supply section

Move the operation switch to the "ICE" position.
Water is supplied until the water supply valve operates and the upper limit sensor in the reservoir is detected. At this time, water must be supplied within 120 seconds, otherwise an error will occur.

Diagnosis:

Check that reservoir fills.
If not, check water supply line shut-off valve, water filters.
Check if the wire connected to the water supply valve is properly connected.
The water supply valve is operated by D24V, and please check that the connected wire is properly connected to the yellow connector at the bottom of the control box.
Whether or not the water supply valve is operating can be checked by whether or not "LED32" on the PCB.
Please check that the hose connected to the water tank is properly connected.

Fill Cycle Complete:

If the water tank is full, check that the water supply valve is closed.
If the water tank is full and the water continues to be supplied, check whether the upper limit sensing of the float switch in the water tank is properly performed.

8) Ice making section

When the water tank is full, the auger motor starts.
The auger motor works and the compressor starts after 1 minute and runs until the ice is full.
When ice is making, the drain valve opens periodically.
The condition opens 2 seconds and closes 1 hour.
When the water level in the reservoir detects the lower limit sensor during ice making, the water supply valve operates to supply water.
When the upper limit sensor is detected, the water supply valve closes.
This process continues until the ice-making mode is "OFF".

Diagnosis:

If the auger motor does not work, check that the capacitors are properly connected. Also, check that the motor power line is properly connected to the brown connector at the bottom of the control box.
If the compressor does not work, check whether the compressor wire is properly connected and check that the wire is connected to the red 3-pin connector at the bottom of the control box.
In addition, the operation of the auger motor and compressor can be checked by checking whether "LED2" and "LED1" on the PCB.
It can also be checked whether the drain valve is operating or not by checking whether "LED33" in the PCB.

9) Ice full section

The temperature sensor located inside the storage bin detects the temperature, determines whether the ice is full, and stops the compressor.
The above conditions are in the table mentioned above, and the determination conditions are based on the temperature sensed by the ambient temperature sensor located in front of the condenser.
If the above conditions are satisfied and the compressor is stopped,
1 minute passes and the auger motor is stopped.

Diagnosis:

If the ice maker continues to operate even though the ice is full, proceed with the inspection as follows.
Check if the ambient temperature sensor is fixed to the lower grille in front of the condenser and is connected to the black 2-pin connector at the bottom of the control box.
Check that the temperature sensor located in the ice container is also connected to the blue 2-pin connector at the bottom of the control box.
In particular, since the sensor is located inside the pipe installed inside the bin, check that the sensor is fully inserted.

10) LED lighting

When the door of the ice maker is opened, the LED turns on automatically, and when the door is closed, the LED turns off.
If the ice maker door is left open for more than 30 seconds, the LED turns off automatically.
There are a total of 5 colors of LED, and when you open the door, you can change the color with the push button on the top.
The color of the LED is white, blue, green, red, embor, and sky blue, and changes every time the button is pressed.

Diagnosis:

If the LED does not light up when the door is opened, check the door sensor.
The door sensor is located at the top and check whether it is properly connected to the natural color 2-pin connector at the bottom of the control box.
Check if the DISPLAY PCB and LED are properly connected.
The DISPLAY PCB is connected to the natural-colored 6-pin connector at the bottom of the control box, and the LED is connected to the blue 4-pin connector.

3. Water Level Sensor Check and Cleaning

A. Water Level Sensor Check

1) Move the operation switch to the “WASH" position.
2) Remove the upper and rear panel.
3) Allow the water system to drain for 30 seconds.
4) Move the operation switch to the "OFF" position, then unplug the appliance from the electrical outlet.
5) Check that the water level sensor connector is properly connected.
6) Check that the black, red, and yellow wires of the water level sensor are properly connected to the opposite connector.
7) Check that the above wires are correctly connected to the PCB in the control box located in the front.
8) Plug the appliance into the electrical outlet, then move the operation switch to the "ICE“ position.
9) Once the reservoir overflows, move the operation switch to the "OFF" position, then unplug the appliance from the electrical outlet.
10) There is a possibility that the float switch's swim bladder did not work properly. Please disassemble the float switch attached to the water tank lid and clean.

B. Water Level Sensor Cleaning

Depending on local water quality conditions, scale can build up on the float switch. At this time, since the swim bladder of the float switch does not move, it may malfunction and cause an error.
1) Move the operation switch to the "OFF" position, then unplug the appliance from the electrical outlet.
2) Remove the upper rear panel.
3) Remove float switch assembly from the water tank lid.
4) Wash the float switch thoroughly with a solution of Ice Doctor and water(Mix 5 liters of water and 0.25 liters of Ice Doctor). It may be necessary to use a brush or dip it in the solution for a few minutes as needed.
5) Rinse float switch assembly thoroughly with clean water and replace in its correct position.
6) Replace the upper rear panel in its correct position.
7) Plug the appliance into the electrical outlet, then move the operation switch to the "ICE“ position to start the automatic ice making process.

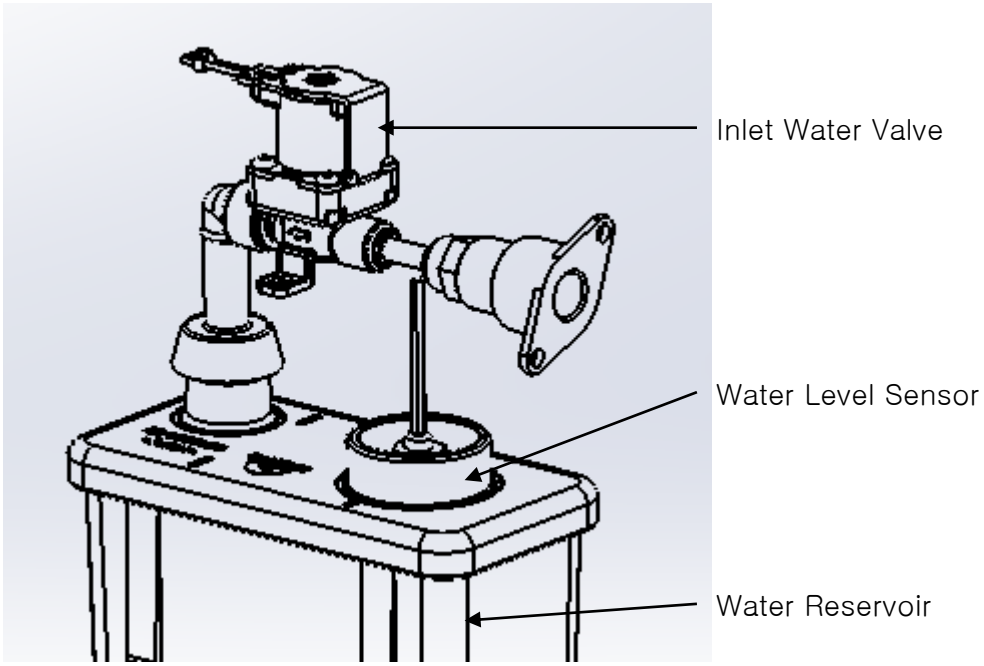
Inlet Water Valve
Water Level Sensor
Water Reservoir

Fig. 1

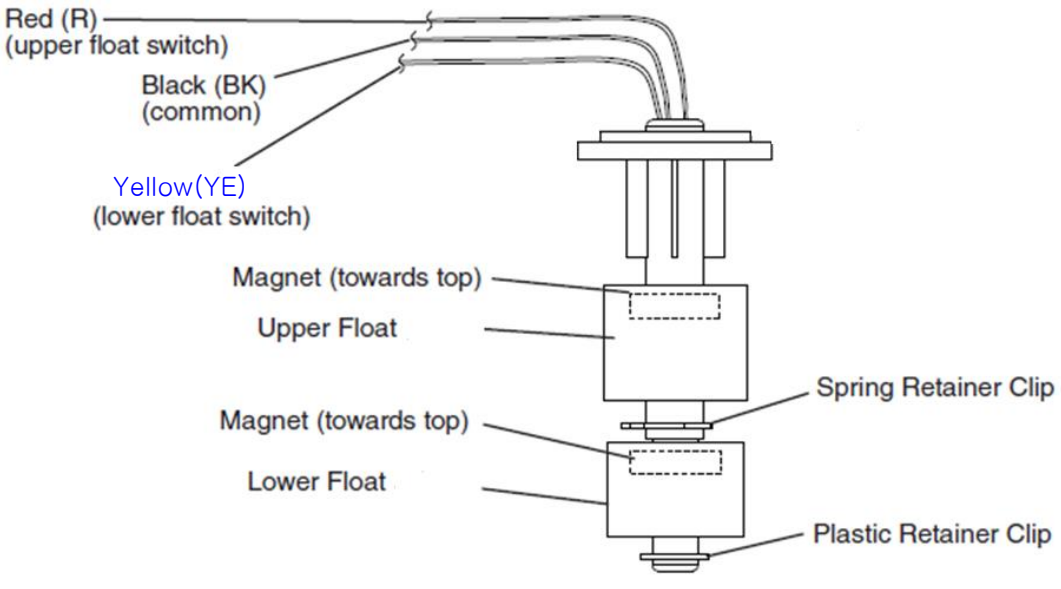
Red (R)
(upper float switch)
Black (BK)
(common)
Yellow(YE)
(lower float switch)
Magnet (towards top)
Upper Float
Spring Retainer Clip
Magnet (towards top)
Lower Float
Plastic Retainer Clip

Fig. 2

4. Optional Drain Pump

A. Overview

As ice melts, water drains from the storage bin into DP. LFS closes. Nothing happens at this time. UFS closes, DP energizes and pumps out the water. UFS opens, nothing happens at this time. LFS opens, DP de-energizes. If water cannot be pumped out of DP due to a blocked discharge hose, bad check valve, or bad DP motor, water level continues to rise and SFS closes. DP continues and appliance de-energizes. Power is supplied to DP motor as long as LFS is closed. For schematic, see "Ⅶ.2. Optional Drain Pump."

⚠ CAUTION

- If you remove DP from the appliance, be sure to follow all instructions below. Failure to do so may result in costly water damage.
- DP has an internal check valve. Do not install an external check valve.

Legend: DP–drain pump; LFS–lower float switch; SFS–safety float switch; UFS–upper float switch

B. Drain Pump Check

When the optional DP is installed, test its operation at least twice a year as outlined below. Note that 115VAC is at DP even when the operation switch is in the "OFF" position.

1) Move the operation switch to the "OFF" position, then unplug the appliance from the electrical outlet. **WARNING! To reduce the risk of electric shock, do not touch the operation switch or plug with damp hands.**
2) Remove all ice from the storage bin.
3) Plug the appliance back in.
4) Slowly pour 24 to 30 oz. (710 to 890 ml) of water over the storage bin drain hole in the storage bin.
5) If water pumps out properly and DP then de-energizes, proceed to step 6. If water does not pump out, confirm 115VAC to drain pump, replace as needed.
6) Move the control switch to the "ICE" position.
7) Pour another 24 to 30 oz. (710 to 890 ml) of water into the appliance's storage bin, then completely restrict the discharge hose while DP is operating. See Fig. 3. Pour more water into the appliance's storage bin until the appliance turns off. DP will continue to operate. Check for leaks.
8) Remove the discharge hose restriction and allow the water to be pumped out normally. Power returns to the appliance when SFS opens.
9) If the appliance fails to turn off with the discharge hose restricted or the pump fails to pump out the water, replace DP.

Legend: DP–drain pump;
SFS–safety float switch

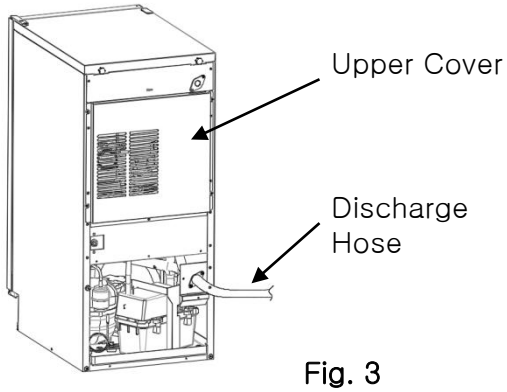

Fig. 3

5. Diagnostic Tables

A. No Ice Production

1) Start up/Fill Cycle

① Power Supply	a) Unplugged, off, blown fuse, or tripped breaker. b) Not within specifications.
② Optional Drain Pump	a) Drain pump connection unplugged or loose. b) Drain pump safety float switch open.
③ Operation Switch	a) "OFF" position. b) Bad contacts.
④ Bin Ice Full Sensor	a) Open with bin filled with ice. b) Out of position. c) Out of adjustment. See "**II.3**. Ice Full Sensor Check." d) Bad contacts. e) Bad thermostat heater.
⑤ Water Supply	a)Water supply off or improper water pressure. b) External water filters clogged.
⑥ Water Control Relay	a) Energized and not allowing water valve to energize. See "**II.4.A.** Water Level Sensor Check." b) Defective.
⑦ Inlet Water Valve	a) Screen or orifice clogged. b) Defective.
⑧ Water Level Sensor See "**II.4**. Water Level Sensor Check and Cleaning."	a) Float does not move freely. b) Defective.

2) Freeze Cycle

① Water Control Relay	a) Defective.
② Time Delay Relay	a) Defective.
③ Gear Motor	a) Gear motor internal protector open or windings open. b) Bad gear motor capacitor. c) Locked bearings. d) Spline coupling or gear broken and auger not turning.
④ Fan Motor	a) Fan blade does not move freely. b) Defective.
⑤ Compressor Relay	a) Defective.
⑥ Compressor	a) Start Capacitor defective b) Inefficient. c) Defective.
⑦ Evaporator	a) Dirty. b) Damaged or defective.
⑧ Condenser	a) Dirty.
⑨ Refrigerant	a) Low charge or overcharged. b) Refrigerant lines or components restricted.
⑩ Water System	a) Water leaks.

3) Refill

① Water Level Sensor See "**II.4**. Water Level Sensor Check and Cleaning."	a) Dirty/sticking. b) Defective.
② Inlet Water Valve	a) Screen or orifice clogged. b) Defective.
③ Water Supply	a) Water supply off or improper water pressure (20 to 90 PSIG). b) External water filters clogged.
④ Water Control Relay	a) Defective.
⑤ Time Delay Relay	a) Defective.

4) Shutdown

① Bin Ice Full Sensor	a) Open with bin filled with ice. b) Out of position. c) Out of adjustment. See "**II.3**. Bin Control Check." d) Bad contacts. e) Bad Sensor (thermostor)

III. Controls and Relays

1. Operation Switch

The control switch has 3 positions, "OFF," "ICE," and “WASH."

a) "OFF": All components except the optional drain pump are de-energized when the operation switch is in the "OFF" position. The optional drain pump circuit remains energized when the operation switch is in the "OFF" position.

b) "ICE": When placed in the "ICE" position, the inlet water valve energizes if upper float switch (UFS) is open. If upper float switch (UFS) is closed, gear motor and compressor energize.

c) “WASH": When placed in the “WASH" position, drain valve energizes, draining the reservoir and evaporator

2. Time Delay Relay

Water valve time limit is 120 seconds.
Compressor start-up delay time is 60 seconds.
The auger motor stop delay time is 60 seconds.
The drain valve operates for 2 seconds and then stops for 1 hour periodically.

3. Water Control Relay

When the lower limit sensor is detected in the water tank, the water supply valve operates, and when the upper limit sensor is detected, the water supply valve closes.

IV. Refrigeration Circuit and Component Service Information

⚠ WARNING

- This appliance should be diagnosed and repaired only by qualified service personnel to reduce the risk of death, electric shock, serious injury, or fire.
- Move the operation switch to the "OFF" position, then unplug the appliance from the electrical outlet before servicing.
- CHOKING HAZARD: Ensure all components, fasteners, and thumbscrews are securely in place after the appliance is serviced. Make sure that none have fallen into the storage bin.
- Make sure all food zones in the icemaker and storage bin are clean after service.

1. Refrigeration Circuit Service Information

! WARNING

- Repairs requiring the refrigeration circuit to be opened must be performed by properly trained and EPA-certified service personnel.
- Use an electronic leak detector or soap bubbles to check for leaks. Add a trace of refrigerant to the system (if using an electronic leak detector), and then raise the pressure using nitrogen gas (140 PSIG). Do not use R-134a as a mixture with pressurized air for leak testing.

⚠ CAUTION

- Always recover the refrigerant and store it in an approved container. Do not discharge the refrigerant into the atmosphere.
- Do not leave the system open for longer than 15 min. when replacing or servicing parts. The Polyol Ester (POE) oils used in R-134a applications can absorb moisture quickly. Therefore it is important to prevent moisture from entering the system when replacing or servicing parts.
- Always install a new drier every time the sealed refrigeration system is opened. Do not replace the drier until after all other repair or replacement has been made. Install the new drier with the arrow on the drier in the direction of the refrigerant flow.
- When brazing, protect the drier by using a wet cloth to prevent the drier from overheating. Do not allow the drier to exceed 250°F (121°C).

A. Refrigerant Recovery

No refrigerant access valves are provided on this appliance. Using proper refrigerant practices, utilize a temporary tap-line valve on the high side to recover the refrigerant. Store the refrigerant in an approved container. Do not discharge the refrigerant into the atmosphere. After recovery is complete, replace the tap-line valve with a proper, permanent access valve.

B. Brazing

⚠ WARNING

- R-134a itself is not flammable at atmospheric pressure and temperatures up to 212°F (100°C).
- R-134a itself is not explosive or poisonous. However, when exposed to high temperatures (open flames), R-134a can be decomposed to form hydrofluoric acid and carbonyl fluoride both of which are hazardous.
- Do not use silver alloy or copper alloy containing arsenic.

1) Braze all fittings while purging with nitrogen gas flowing at a pressure of 3 to 4 PSIG.

⚠ CAUTION

- Always install a new drier every time the sealed refrigeration system is opened Do not replace the drier until after all other repair or replacement has been made. Install the new drier with the arrow on the drier in the direction of the refrigerant flow.
- When brazing, protect the drier by using a wet cloth to prevent the drier from overheating. Do not allow the drier to exceed 250°F (121°C).

2) Use an electronic leak detector or soap bubbles to check for leaks. Add a trace of refrigerant to the system (if using an electronic leak detector), and then raise the pressure using nitrogen gas (140 PSIG). Do not use R-134a as a mixture with pressurized air for leak testing.

C. Evacuation and Recharge (R-134a)

1) Attach a vacuum pump to the system. Be sure the high-side charging hose is connected to the field-installed high-side access valve.

⚠ CAUTION

The vacuum level and vacuum pump may be the same as those for current refrigerants. However, the rubber hose and gauge manifold to be used for evacuation and refrigerant charge should be exclusively for POE oils.

2) Turn on the vacuum pump, then open the high-side valve on the gauge manifold. Never allow the oil in the vacuum pump to flow backwards.
3) Allow the vacuum pump to pull down to a 29.9" Hg vacuum. Evacuating period depends on pump capacity.
4) Close the high-side valve on the gauge manifold.
5) Disconnect the gauge manifold hose from the vacuum pump and attach it to a refrigerant service cylinder. Remember to loosen the connection and purge the air from the hose. For the required refrigerant charge, Use only pure refrigerant
6) A liquid charge is required when charging an R-134a system. Place the service cylinder on the scales; if the service cylinder is not equipped with a dip tube, invert the service cylinder, then place it on the scales. Open the high-side valve on the gauge manifold.
7) Allow the system to charge with liquid until the proper charge weight is met.
8) Close the high-side valve on the gauge manifold, then close the refrigerant access valve (if applicable). Disconnect the gauge manifold hose.
9) Cap the refrigerant access valve to prevent a possible leak.

2. Component Service Information

⚠ CAUTION

- When replacing a component listed below, see the notes to help ensure proper operation.
- When replacing evaporator assembly and water circuit components, make sure there are no water leaks after the repair is complete.

Component	Notes
① Extruding Head	a) Check for leaks around the seal bolt. Tighten if necessary and replace O-rings. b) Always replace the O-ring when loosening the seal bolt and tighten it again. apply Loctite 243 or equivalent fixing sgent to seal bolt threads. c) If there is no O-ring, apply Loctite 243 or equivalent fixing agent so that it does not leak. (torque of 11.1 ft-lb/15 N·m.)
② Compressor	a) Install a new drier.
③ Upper and Lower Bearings	a) Inspect the upper bearing for wear. See "**IV.2.A**. Upper Bearing Wear Check." Replace if necessary. b) When replacing the upper bearing it is advised to also change the lower bearing at the same time.
④ Evaporator	a) Install a new drier. b) Inspect the mechanical seal and O-ring prior to installing the new evaporator. If worn, cracked, or scratched, the mechanical seal should also be replaced.
⑤ Gear Motor	a)Install a new gear motor capacitor.

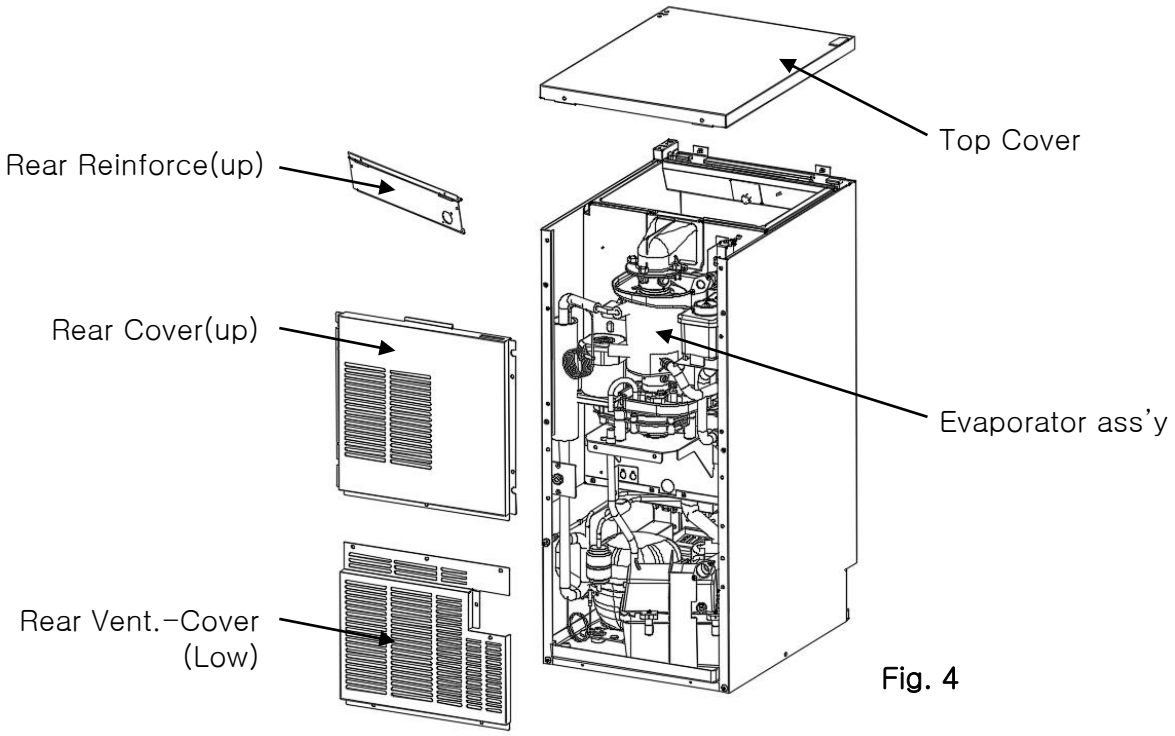

Fig. 4

- Evaporator Assembly

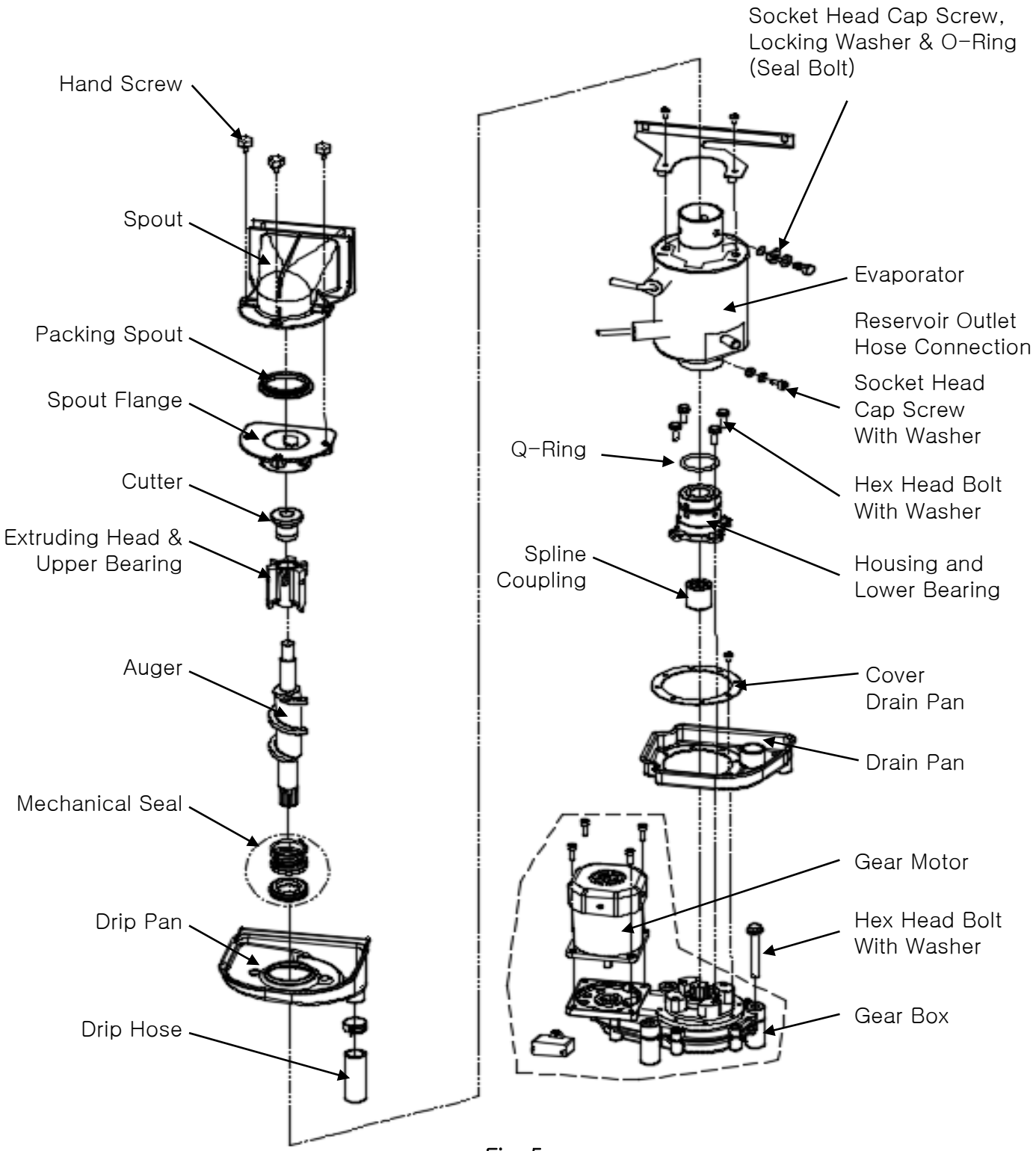

Fig. 5

A. Upper Bearing Wear Check

To ensure that the bearing inside the extruding head does not exceed the wear tolerance of 0.02“, follow the instructions below.

1) Move the operation switch to the "OFF" position, then unplug the appliance from the electrical outlet.
2) Remove all ice from the storage bin.
3) Remove the top cover. See Fig. 4.
4) Remove the spout and packing.
5) Remove the cutter.
6) Grasp the top of the auger and move the auger towards you and then try to insert a 0.02“ round stock or pin gauge in between the back side of the auger shaft and the bearing surface. See Fig. 6. Check several locations around the auger shaft. If the gauge goes between the shaft and the bearing at any point or if the bearing is scratched or cracked, both the top bearing in the extruding head and the lower bearing in the housing should be replaced. Instructions for removing the extruding head and housing are located later in this procedure.
   Note: Replacing the bearing requires a bearing press adaptor. If one is not available, replace the entire extruding head and housing.
7) Replace the removed parts and panel in the reverse order of which they were removed.
8) Plug the appliance into the electrical outlet, then move the operation switch to the "ICE“ position to start the automatic icemaking process.

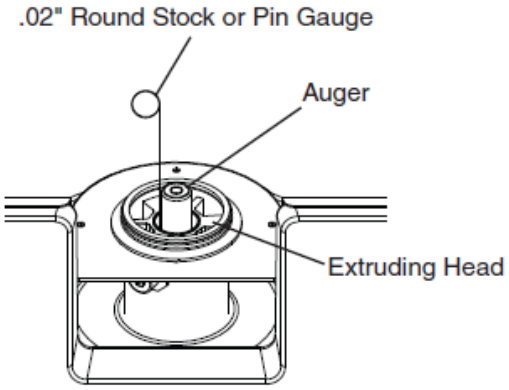

Fig. 6

B. Removal and Replacement of Extruding Head

1) Close the water supply line shut-off valve
2) Move the operation switch to the “WASH" position.
3) Allow the water system to drain for 1 minute.
4) Remove all ice from the storage bin.
5) After all of the water has drained, move the control switch to the "OFF" position. Unplug the appliance from the electrical outlet.
6) Remove the top cover. See Fig. 4.
7) Remove the spout and packing.
8) Loosen the cutter (do not remove).
9) Remove the seal bolts securing the extruding head and evaporator flange, then grasp the cutter and lift off.

NOTICE! Always replace the O-ring when loosening the seal bolt and tighten it again

10) Remove the cutter from the old extruding head and place it on the new extruding head.
11) Place and align the new extruding head and evaporator flange. See Fig. 7.

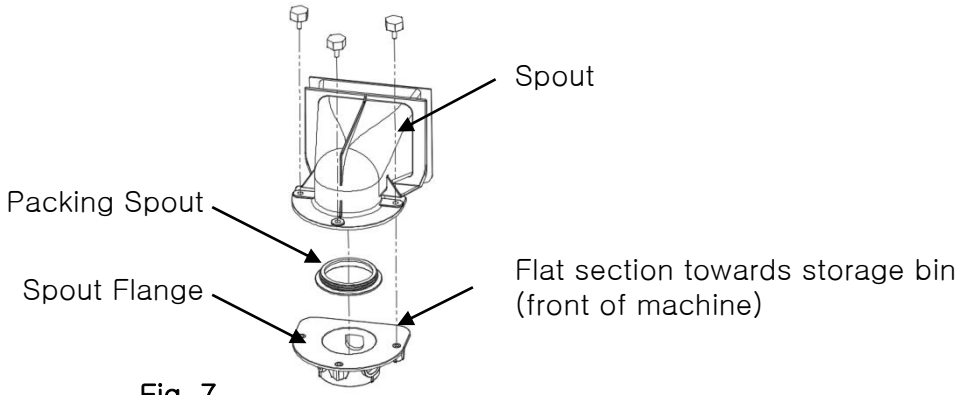

Fig. 7

12) Tighten new seal bolts to a torque of 11.1 ft-lb/15 N·m.
13) Tighten down the cutter.
14) Secure the packing and spout in their correct positions.
15) Open the water supply line shut-off valve.
16) Plug the appliance into the electrical outlet, then move the operation switch to the "ICE“ position to start the automatic icemaking process.
17) Once the appliance starts to produce ice, allow it to run for another 30 minutes. Check for water leaks.
18) After 30 minutes, move the operation switch to the "OFF" position. Unplug the appliance from the electrical outlet.
19) Pour warm water into the storage bin and melt the ice. Clean the storage bin liner using a neutral cleaner. Rinse thoroughly after cleaning.
20) Replace the top cover in its correct position.
21) Plug the appliance into the electrical outlet, then move the operation switch to the "ICE“ position to start the automatic icemaking process.

C. Removal and Replacement of Auger

1) Proceed in the order of Ⅳ.2.B.1)~9)
3) Grasp the auger and carefully lift out.
3) When pulling out the auger, the upper part of the mechanical seal should come out with it. The mechanical seal consists of two parts. One moves along with the auger, and the other is fixed on the lower housing. Inspect the part of the mechanical seal that came out with the auger. If the contact surface on the bottom of the seal is worn, cracked or scratched, the mechanical seal may cause water leaks and both the upper and lower parts of the mechanical seal should be replaced. Instructions for removing the mechanical seal are located later in this procedure.
4) Remove the mechanical seal from the old auger and place it on the new auger.
5) Install the new auger.
6) Replace the extruding head (with cutter), and evaporator flange in their correct positions. Confirm the cutter is tight. See Fig. 7.
7) If new seal bolts do not have preapplied threadlocker, apply Loctite 243 or equivalent threadlocker to seal bolts. Tighten to a torque of 11.1 ft-lb/15 N·m.
8) Replace the packing and spout in their correct positions.
9) Open the water supply line shut-off valve.
10) Plug the appliance into the electrical outlet, then move the operation switch to the "ICE" position to start the automatic icemaking process.
11) Once the appliance starts to produce ice, allow it to run for another 30 minutes. Check for water leaks.
12) After 30 minutes, move the operation switch to the "OFF" position. Unplug the appliance from the electrical outlet.
13) Pour warm water into the storage bin and melt the ice. Clean the storage bin liner using a neutral cleaner. Rinse thoroughly after cleaning.
14) Replace the top panel in its correct position.
15) Plug the appliance into the electrical outlet, then move the operation switch to the "ICE" position to start the automatic icemaking process.

D. Removal and Replacement of Evaporator

⚠ CAUTION

- Always install a new drier every time the sealed refrigeration system is opened. Do not replace the drier until after all other repair or replacement has been made.
- When brazing, protect the drier by using a wet cloth to prevent the drier from overheating. Do not allow the drier to exceed 250°F (121°C).

1) Proceed in the order of Ⅳ.2.B.1)~9)
2) Grasp the cutter and carefully lift out the extruding head and auger. When pulling out the auger, the upper part of the mechanical seal should come out with it.
3) Disconnect the reservoir outlet hose from the evaporator.
4) Remove the evaporator condensate drain pan.
5) Install a temporary tap-line valve on the high side, then recover the refrigerant and store it in an approved container.
6) Disconnect the inlet and outlet tubing.
7) Remove the socket head cap screws securing the evaporator to the lower housing.

8) Lift off the evaporator.
9) Inspect the mechanical seal and O-ring prior to installing the new evaporator. The mechanical seal consists of two parts. One moves along with the auger, and the other is fixed on the lower housing. If the contact surfaces of these two parts are worn, cracked or scratched, the mechanical seal may cause water leaks and should be replaced. Instructions for removing the mechanical seal and lower housing are located later in this procedure.
10) Make sure the lower mechanical seal and the O-ring are in place, then place the evaporator assembly in position. Secure the evaporator to the lower housing using the socket head cap screws.
11) Replace the tap-line valve with a proper, permanent access valve.
12) Remove the drier, then place the new drier in position.
13) Braze all fittings while purging with nitrogen gas flowing at a pressure of 3 to 4 PSIG.
14) Use an electronic leak detector or soap bubbles to check for leaks. Add a trace of refrigerant to the system (if using an electronic leak detector), and then raise the pressure using nitrogen gas (140 PSIG). Do not use R-134a as a mixture with pressurized air for leak testing.
15) Evacuate the system, then charge it with refrigerant. See the nameplate for the required refrigerant charge.
16) Reattach and secure the reservoir outlet hose. Replace the evaporator condensate drain pan and all hoses in their correct positions.
17) Install the auger assembly with the upper part of the mechanical seal attached. Replace the cutter, extruding head, and evaporator flange in their correct positions and align the extruding head and evaporator flange holes. See Fig. 7.
18) If new seal bolts do not have preapplied threadlocker, apply Loctite 243 or equivalent threadlocker to seal bolts. Tighten seal bolts to a torque of 11.1 ft-lb/15 N·m.
19) Replace the packing and spout in their correct positions.
20) Open the water supply line shut-off valve.
21) Plug the appliance into the electrical outlet, then move the operation switch to the "ICE“ position to start the automatic icemaking process.
22) Once the appliance starts to produce ice, allow it to run for another 30 minutes. Check for water leaks.
23) After 30 minutes, move the operation switch to the "OFF" position. Unplug the appliance from the electrical outlet.
24) Pour warm water into the storage bin and melt the ice. Clean the storage bin liner using a neutral cleaner. Rinse thoroughly after cleaning.
25) Replace the rear panels and top panel in their correct positions.
26) Plug the appliance into the electrical outlet, then move the operation switch to the "ICE“ position to start the automatic icemaking process.

E. Removal and Replacement of Mechanical Seal and Lower Housing

Ea. Mechanical Seal

1) Proceed in the order of IV.2.B.1)~9)
2) Grasp the cutter and carefully lift out the extruding head.
3) Grasp the auger and carefully lift it out. When pulling out the auger, the upper part of the mechanical seal should come out with it.
4) Remove the socket head cap screws securing the evaporator to the lower housing.
5) Raise the evaporator up to access the lower housing.
6) The mechanical seal consists of two parts. One moves along with the auger, and the other is fixed on the lower housing. If the contact surfaces of these two parts are worn, cracked or scratched, the mechanical seal may cause water leaks and should be replaced.
7) Remove the mechanical seal from the housing. If only replacing the mechanical seal, proceed to step 10.

NOTICE! To help prevent water leaks, be careful not to damage the surfaces of the O-ring or mechanical seal.

Eb. Lower Housing

8) Remove the O-ring and the bolts securing the lower housing to the gear motor and remove the housing from the gear motor. If inspection of the upper bearing inside the extruding head (see "IV.2.A. Upper Bearing Wear Check") indicates that it is out of tolerance, replace both it and the bearing inside the lower housing.
Note: Replacing the bearing requires a bearing press adaptor. If one is not available, replace the entire extruding head and housing.
9) Mount the lower housing onto the gear motor, then install the O-ring onto the lower housing.
10) Install the lower part of the mechanical seal onto the lower housing.
11) Lower the evaporator down and secure it to the lower housing.
12) Install the auger assembly with the upper part of the mechanical seal attached. Replace the cutter, extruding head, and evaporator flange in their correct positions. Align the evaporator flange holes with the extruding head holes. See Fig. 7.
13) If new seal bolts do not have preapplied threadlocker, apply Loctite 243 or equivalent threadlocker to seal bolts. Tighten new seal bolts to a torque of 11.1 ft-lb/15 N·m.
14) Tighten the cutter on the auger.
15) Replace the packing and spout in their correct positions.
16) Open the water supply line shut-off valve.
17) Plug the appliance into the electrical outlet, then move the operation switch to the "ICE" position to start the automatic icemaking process.
18) Once the appliance starts to produce ice, allow it to run for another 30 minutes. Check for water leaks.
19) After 30 minutes, move the operation switch to the "OFF" position. Unplug the appliance from the electrical outlet.
20) Pour warm water into the storage bin and melt the ice. Clean the storage bin liner using a neutral cleaner. Rinse thoroughly after cleaning.
21) Replace the upper rear panel and top panel in their correct positions.
22) Plug the appliance into the electrical outlet, then move the operation switch to the "ICE" position to start the automatic icemaking process.

F. Removal and Replacement of Gear Motor

NOTICE! Icetro recommends that the gear motor capacitor be replaced at the same time as the gear motor.

1) Close the water supply line shut-off valve.
2) Move the operation switch to the “WASH" position.
3) Allow the water system to drain for 1 minute.
4) After all of the water has drained, move the operation switch to the "OFF" position, then unplug the appliance from the electrical outlet.
5) Remove all ice from the storage bin.
6) Remove the top panel and upper rear panel. See Fig. 4.
7) Remove the bolts securing the lower housing to the gear motor. Lift the evaporator up slightly.
8) Remove the bolts securing the gear motor.
9) Disconnect the gear motor wires, then remove the gear motor.
10) Attach the spline coupling from the old gear motor to the new gear motor.
11) Install the new gear motor.
12) Lower the evaporator onto the gear motor. Secure the lower housing to the gear motor.
13) Reconnect the electrical wires.
14) Open the water supply line shut-off valve.
15) Plug the appliance into the electrical outlet, then move the operation switch to the "ICE“ position to start the automatic icemaking process.
16) Once the appliance starts to produce ice, check for water leaks.
17) Move the operation switch to the "OFF" position, then unplug the appliance from the electrical outlet.
18) Pour warm water into the storage bin and melt the ice. Clean the storage bin liner using a neutral cleaner. Rinse thoroughly after cleaning.
19) Replace the upper rear panel and top panel in their correct positions.
20) Plug the appliance into the electrical outlet, then move the operation switch to the "ICE“ position to start the automatic icemaking process.

V. Maintenance

The appliance must be maintained in accordance with the instruction manual and labels provided.

⚠ CAUTION

- Only qualified service technicians should service the appliance.
- To reduce the risk of electric shock, do not touch the operation switch with damp hands.
- Before Servicing: Move the operation switch to the "OFF" position. Unplug the appliance from the electrical outlet to prevent the power supply from being turned back on inadvertently.
- CHOKING HAZARD: Ensure all components, fasteners, and thumbscrews are securely in place after any maintenance is done to the appliance. Make sure that none have fallen into the storage bin.
- Do not place fingers or any other objects into the ice discharge opening.
- After service, make sure that there are no wires pinched between the panels and appliance. Make sure you do not damage or pinch the water supply line, drain line, or power cord.

1. Maintenance Schedule

-The following maintenance schedule is guideline

-Maintenance and repair should be done more frequently according to water quality, equipment usage environment and local hygiene regulations.

Maintenance Schedule		
Frequency	Area	Task
Daily	Scoop	Clean the scoop using a neutral cleaner. Rinse thoroughly after cleaning.
Monthly	External water filter	Make sure that the pressure is adequate and make changes if needed.
	Outside of the ice maker	Wipe down with clean, soft cloth. Use a damp cloth containing a neutral cleaner to wipe off oil or dirt build up. Clean any chlorine staining (rustcolored spots) using a non-abrasive cleanser.
	Storage Bin, Inner door, Ice outlet(Spout)	Wipe clean with clean cloth and warm water.
Every 6 Months	Icemaker andStorage Bin	Clean and disinfect according to the disinfection instructions given in the instruction manual.
	Evaporator Condensate Drain Pan and Gear Motor Drain Pan	Wipe down with clean cloth and warm water.
	Ice maker and reservoir	Always check that it is kept clean.
	Ice exit fixing seal bolt	Check for leaks around the seal bolt. Tighten if necessary and replace O-rings. Always replace the O-ring when loosening the seal bolt and tighten it again. If there isno O-ring, apply Loctite 243 or equivalent fixing agent so that it does not leak.
Yearly	Water supply valve and Drain valve	Close the shutoff valve to shut off the water supply line and drain the water. Close the shutoff valve to shut off the water supply line and drain the water.
	Water hose	Check the water hose and clean it if necessary.
	Condenser (air-cooled)	Inspect for cleaning. If necessary, clean with a brush or vacuum cleaner If the dust adhesion is severe, spray the pin cleaning agent, clean the dust, spray it with clean water, rinse and dry with air gun.
	Ice maker	Inspect for oil marks, loose components, tightening parts and wires.
	Upper bearing (Ice exit head)	Check that 0.02" round bar or pin gauge (or clearance gauge) is inserted into auger and bearing clearance, and replace all upper and lower bearings (ice exit head and lower housing)
	Mechanical seal	Check for leaks in the bottom housing, and if there is a leak, disassemble the auger to replace the mechanical seal. (Water with a lot of calcium will shorten the life of replacement parts.)
After 3 Years, then Yearly	Upper and lower bearings, Housing O-ring, Mechanical seals, Evaporator cylinder, Auger	Please chek. If the auger and bearing clearance exceeds the factory recommended value (0.02" or less), replace both the upper and lower bearings. If the contact surface of the mechanical seal is worn, cracked, or scratched, replace it.

VI. Preparing the Appliance for Periods of Non-Use

During extended periods of non-use, extended absences, or in sub-freezing temperatures, follow the instructions below. When the appliance is not used for two or three days under normal conditions, it is sufficient to move the operation switch to the "OFF“ position.

⚠CAUTION

Only qualified service technicians should service the appliance.
During extended periods of non-use, extended absences, or in sub-freezing temperatures, follow the instructions below to reduce the risk of costly water damage.

1) Move the operation switch to the "OFF" position. **WARNING! To reduce the risk of electric shock, do not touch the control switch or plug with damp hands.**
2) Close the water supply line shut-off valve, then open the water supply line drain valve.
3) Allow the line to drain by gravity.
4) Move the operation switch to the “WASH" position.
5) Allow the water system to drain for 1 min.
6) Attach a compressed air or carbon dioxide supply to the water supply line drain valve.
7) Move the operation switch to the "ICE" position.
8) Blow the water supply line out using the compressed air or carbon dioxide supply.
9) Close the water supply line drain valve.
10) Move the operation switch to the "OFF" position, then unplug the appliance from the electrical outlet.
11) Remove the screws securing the upper rear panel, then remove it. See Fig. 8.
12) Remove the clamp securing the reservoir outlet hose to the reservoir. Disconnect the reservoir outlet hose from the reservoir.
13) Attach a compressed air or carbon dioxide supply to the reservoir outlet hose.

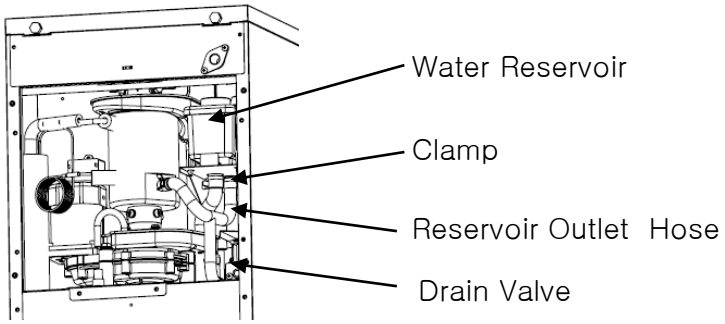

Fig. 8

14) Plug the appliance back in, then move the operation switch to the " WASH" position.
15) Blow out the reservoir outlet hose using the compressed air or carbon dioxide supply.
16) Move the operation switch to the "OFF" position, then unplug the appliance from the electrical outlet.
17) Reconnect the reservoir outlet hose to the reservoir, then secure with the clamp. Make sure all hoses are connected and secure.
18) Replace the rear panel in its correct position.
19) Clean the storage bin by using a neutral cleaner. Rinse thoroughly after cleaning.

Ⅶ. Technical Information

1. **Specifications**

Items		Specification	Remarks
Model		IU-0090-AN, IU-0090-ANP IU-0090-ANA, IU-0090-ANAP	~P: W/D Drain Pump
Ice shape		Nugget	
※ Maximum sapacity (at air 50°F, water 50°F)		88 lb/day (40 kg/day)	
Storage capacity		24.3 lb (11 kg)	
※ ※ Size (WxDxH)		AN~ : 14.9" x 21.9" x 34" (378 x 556 x 858 mm) ANA~ : 14.9" x 21.9" x 32" (378 x 556 x 813 mm)	
Power supply		AC 115V 60 Hz, 1PH	
Current consumption		3.3 A	
Weight	Before packing	112±11lb (51±5 kg)	
	After packing	187±11lb (85±5 kg)	
Compressor		510W	
Condensation method		Air-cooled	
Refrigerant		R-134a	
Geared motor	Power supply	AC 115V 60 Hz, 1PH	
	Rated output	40W	
Installation environment standard	Ambient temperature	50 ~ 100 °F (10 ~ 38 ℃)	
	Supplied water temperature	50 ~ 80 °F (10 ~ 32 ℃)	
	Water pressure	20 ~ 90 psi (0.1 Mpa ~ 0.5 Mpa)	

2. Wiring Diagrams

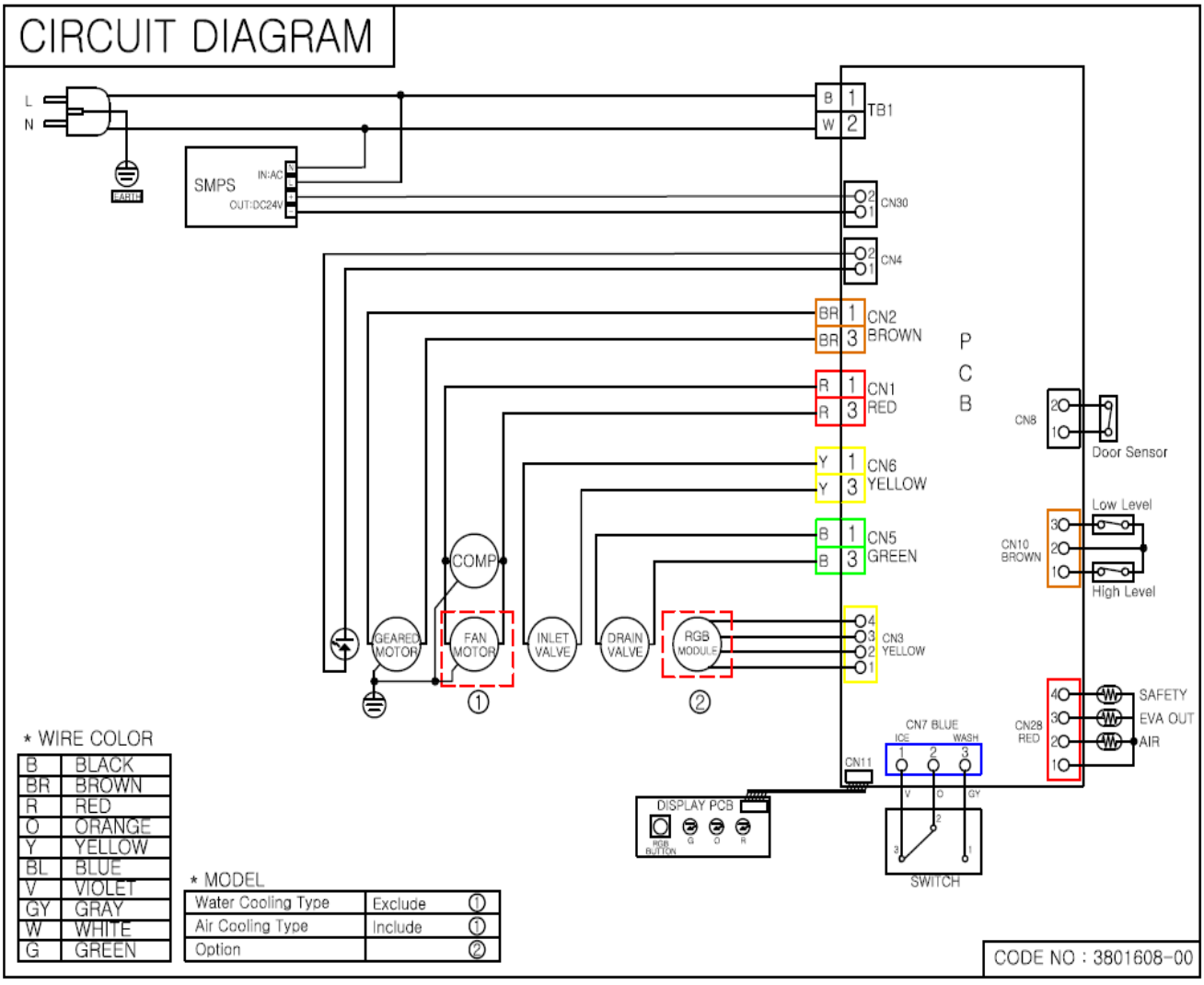

3. Optional Drain Pump Wiring Diagrams

CIRCUIT DIAGRAM

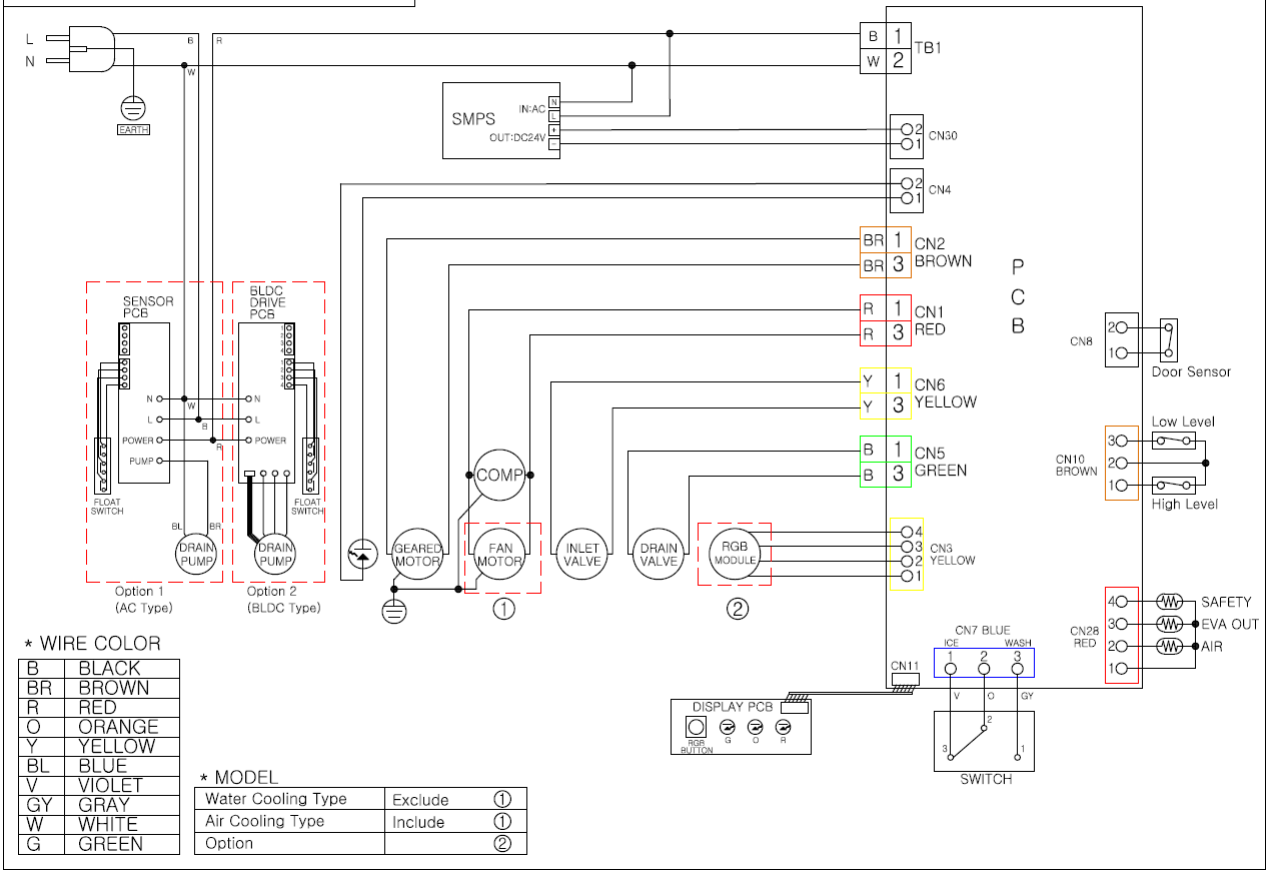

* WIRE COLOR

B	BLACK
BR	BROWN
R	RED
O	ORANGE
Y	YELLOW
BL	BLUE
V	VIOLET
GY	GRAY
W	WHITE
G	GREEN

* MODEL

Water Cooling Type	Exclude	①
Air Cooling Type	Include	①
Option		②

4. Error Type

Current Condition	Lamp			Causes	Action / Release
	● ICE	● NO WAER	● DRAIN		
Ice Making	**L**			When the operation switch is switched to the 'ICE' position	
Washing	**B**			When the operation switch is changed to 'WASH', the 'ICE' lamp blinks (every 1 second)	Drainage stops and goes out when the operation switch is switched to the 'off' position
Ice Full (Storage bin)	**B**			When the storage bin is full of ice (Lights on every 2 seconds, turns off for 1 second repeatedly)	When the ice full sensor detects the release temperature, the lamp turns off
Drain valve operating			**L**	When the drain valve opens	
Water supply error		**B**		When water level is not detected by the water level sensor due to no water supply for 2 minutes.(Er15)	Water supply pressure check Water level sensor check Start operation after action
Water drain error			**B**	If the lower limit water level sensor is not detected within 2 minutes as the drain valve operates(Er16)	Replacement of water wevel wensor Check drain valve operation Start operation after action
Evaporator temperature error	**B**	**B**	**B**	When the Evaporator temperature is 32°F or more after 30 minutes passed during the ice making(Er01)	Check refrigerant leakage Check sensor and attachment abnormality Resupply power after resolving cooling problem
Evaporator temperature error	**B**			When the Evaporator temperature is 32°F or more after 10 minutes passed during the ice making(Er03)	Check refrigerant leakage Check sensor and attachment abnormality Resupply power after resolving cooling problem
Ice full sensor error		**B**	**B**	When the ice full temperature sensor in the storage bin is disconnected or shorted	Check sensor and attachment abnormality Start operation after sensor part repair
Evaporator temperature sensor error	**B**	**B**		When the EVA temperature sensor at the evaporator outlet is disconnected or shorted	
Air temperature sensor error	**B**		**B**	When the air temperature sensor in front of the condenser is disconnected or shorted	
Evaporator freezing	**L**	**L**	**L**	When the evaporator outlet temperature drops below the set temperature for 2 minutes while the ice maker is running(Er25)	Occurs when the ambient temperature is low Operate when the ambient temperature is over 50°F

*** L:** Lamp On, B: Lamp Blinking