DFG-50
GAS CONVECTION OVEN
REPLACEMENT PARTS LIST



EFFECTIVE OCTOBER 15, 2026

Superseding All Previous Parts Lists.
The Company reserves the right to make substitution in the event that items specified are not available.
ERRORS: Descriptive and/or typographic errors are subject to correction.

BLODGETT OVEN COMPANY
42 Allen Martin Drive, Essex Junction, Vermont 05452 USA Telephone: (802) 658-6600 Fax: (802) 860-3732
www.blodgett.com

P/N 54769 Rev AD (10/26)

SERIAL NUMBER LOCATION / KEY:

IMPORTANT: When ordering parts, please provide the model, gas type and serial number of the oven. The identification plate is located on the back of the oven.

SERIAL NUMBER IDENTIFICATION CODE:

SA = DFG50 BEFORE 09/12/2026

SB = DFG50 AFTER 09/12/2026

SERIAL NUMBER EXAMPLES

011915SB001 OR 120124SBS-00000000000000000001

01/19/15 = DATE

SB = LETTER CODE FOR DFG50

001 = FACTORY SEQUENCE

IMPORTANT: When ordering parts, please provide the model, gas type and serial number of the oven. The identification plate is located on the left side of the combustion compartment and, also, above the control panel under the ledge.

♦ **Doors Are Not Returnable**

ELECTRICAL COMPONENTS

Ref. No.	Part No.	Description
1	20349	Buzzer, for 115V Timer
4	18868	Mode Selector Switch w/o Knob
5	16686	Knob, Mode Selector Switch
	30841	Cool Down Switch, Rocker DPDT Red Replacement Kit (For 1 & 3 Set Point only)
2	18265	Indicator Light, 28V, Red, Round
3	20355	Transformer, 115V to 24V
6	57859	Motor, 208-240V, 1/2 HP, 1 SP
	59123	Motor, 115V, 1/2 HP
19	16994	Blower Wheel Assy., (10-3/4" Diameter)
	4888	Lug, Grounding
	5091	Cord Set Assy. (6 Feet)
8a	20734	Microswitch Assy., Door (Before 6/24)
8b	35193	Microswitch Assy., Door (After 6/24)
	21605	Bracket, Door Microswitch (Before 6/24)
7	20693	Axial Fan, Low Velocity, 3" (Before 8/90)
7	22301	Axial Fan, 120V, 4-1/2" (After 8/90)
21	38605	Terminal Block, 3-Pole
22	5281	Block Terminal, 90a 3-Pole
23	20355	Transformer, 115v to 24v
24	50952	Terminal Block, 5 Posititon, Push-in
25	20356	Transformer, 115/230V-240V

SOLID STATE MANUAL CONTROLS

STANDARD ON OVENS MANUFACTURED AFTER 7/87 AND BEFORE XX/XX

Ref. No.	Part No.	Description
	17000	Probe, Temperature (For 1 & 3 Position Controllers)
16	18578	Temperature Control Board
17	18588	Probe, Temperature
20	18234	Potentiometer, Remote (Infinite Control)
	16686	Knob, 8 Position Temperature Switch
15	18225	Timer, 60 Minute 120V
	16686	Knob, Timer
	90099	Heat Selector Switch, 3 Positions w/o Knob
	16686	Knob, Heat Selector Switch
	19303	Wiring Harness, Inf/8-3-1 STPT
	19165	Control Panel, Porcelain

MECHANICAL CONTROLS

FOR OVENS MANUFACTURED BEFORE 7/87

Ref. No.	Part No.	Description
	15956	Timer, 60 Minute w/o Knob (Cook Only)
	16030	Knob, Timer
	15673	Indicator Light, 125V, Red, Round (Cook)
	16536	Thermostat, Cook KX-234-36 w/o Knob (140º - 500º)
	17212	Knob, Thermostat

HOT SURFACE IGNITION

STANDARD ON OVENS MANUFACTURED BEFORE 3/86

Ref. No.	Part No.	Description
	20275	Solenoid Valve/Pressure Regulator, LP
13	17952	Ignitor, Electric
	20661	Base & Bracket, Thermal Delay Relay
	16372	Fuse, 5 AMP
	20658	Fuse Holder, 5 AMP Fuse
	11200	Terminal Block w/ Screws

SPARK IGNITION SYSTEM

STANDARD ON OVENS MANUFACTURED AFTER 3/86

Ref. No.	Part No.	Description
9	30005	Dual Solenoid/Pressure Regulator, Nat
	30006	Dual Solenoid/Pressure Regulator, LP
10	20348	Spark Box, LP & Nat
	34689	Capacitor Assy, Snubber (After 1/21/99 or S.N. 012199SA044T)
11	56463	Pilot Burner, Complete, Nat
	56464	Pilot Burner, Complete, LP
12	18256	Flame Sensor Only
	19677	Wire, Flame Sensor
	18263	Orifice, Pilot, Nat
	18257	Orifice, Pilot, LP
	36313	Tube Assy., Pilot
	20195	Spark Gap Gauge (tool)
	102258	Kit, Pilot Tube Replacement

MISC. COMPONENTS

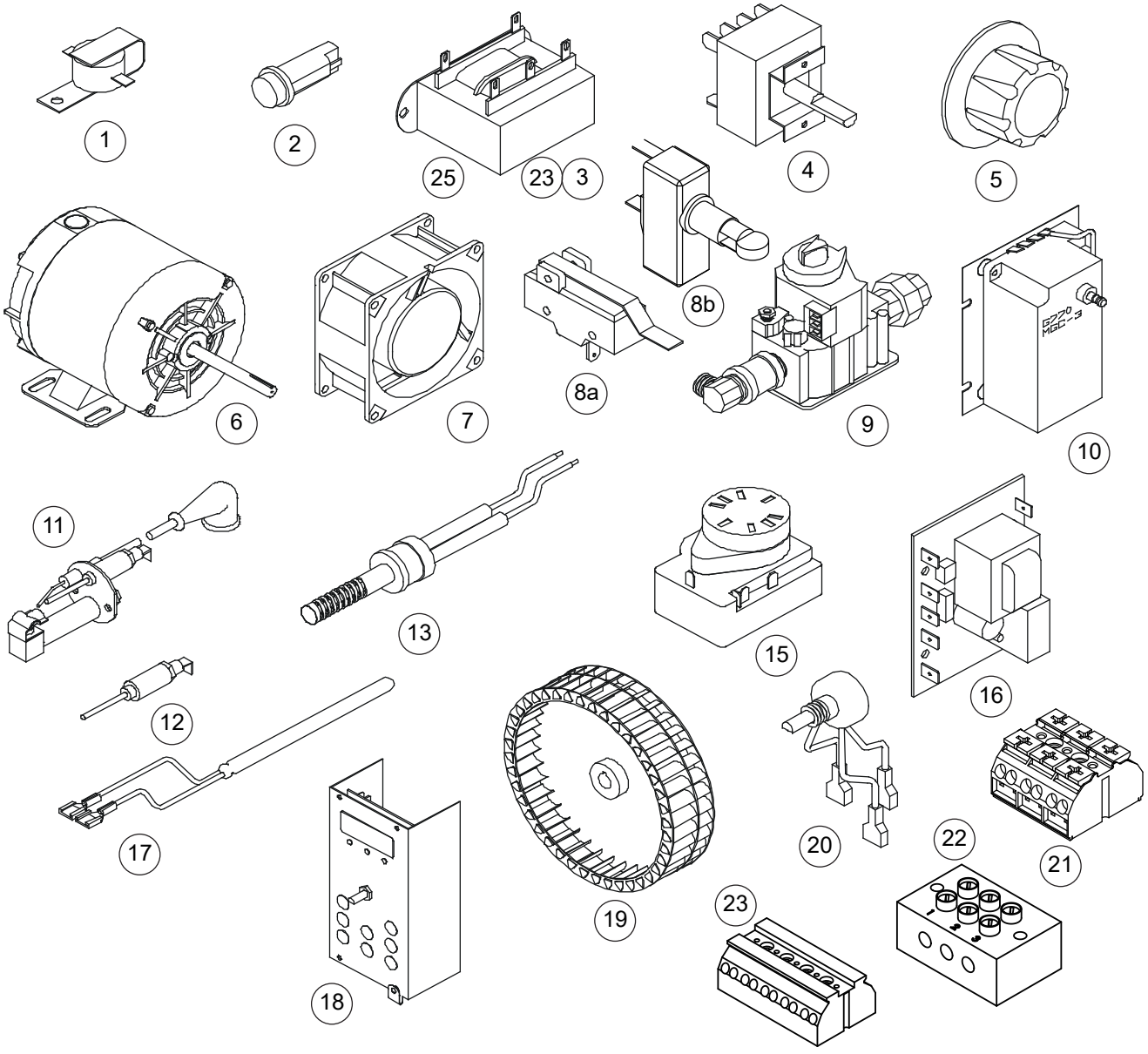

SOLID STATE MANUAL CONTROL

STANDARD ON OVENS MANUFACTURED AFTER XX/XX

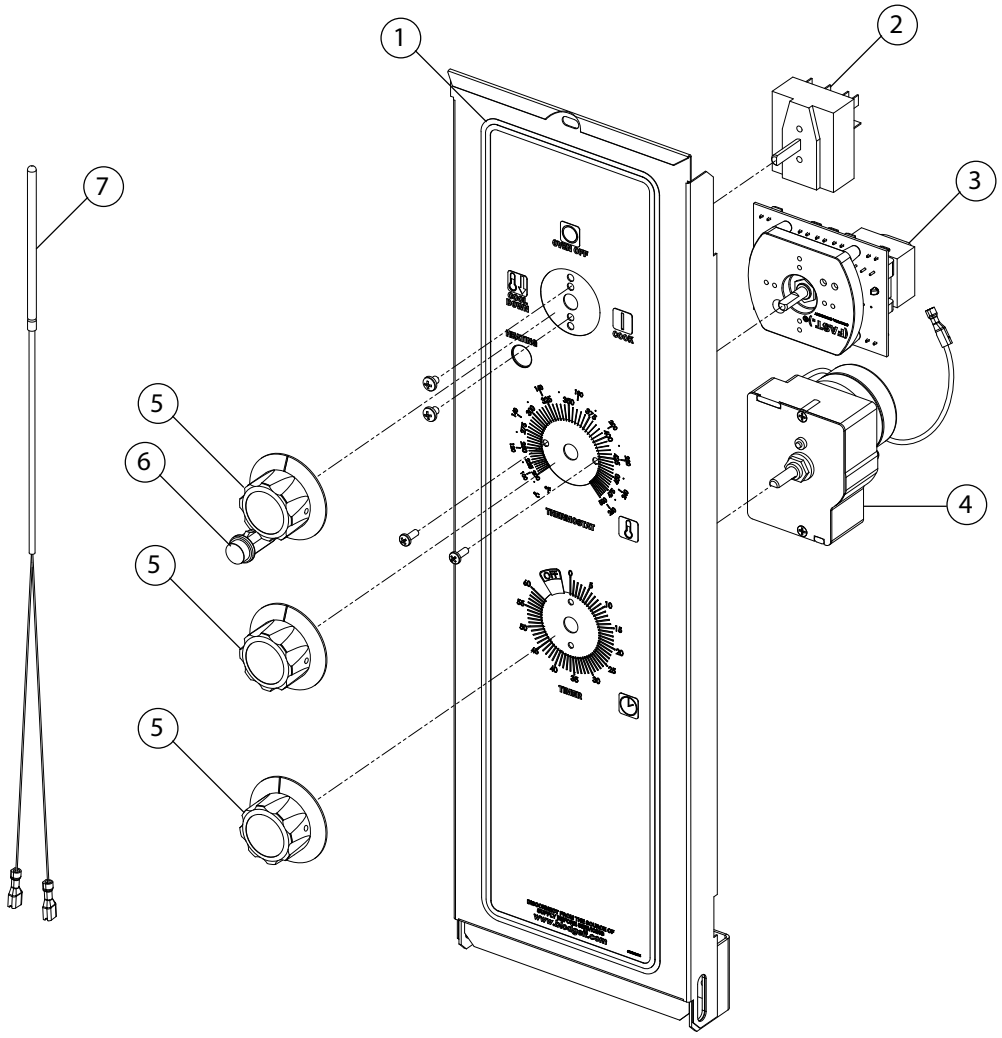

Ref. No.	Part No.	Description
1	102339	Decal and Panel Assembly. Control, Infinite
2	18868	Switch, Mode Selection
3	56741	THERMOSTAT, 200-500°F, 350° TDC
4	18225	TIMER. 60 MIN, 120V, 60 HZ
4	20084	TIMER, 60MIN 240V 50HZ (CE Only)
5	16686	Knob, Control
6	18265	Light, Indicator
7	56873	Probe, 1K RTD 3/16 Terminated

SOLID STATE DIGITAL CONTROLS

5 KEY

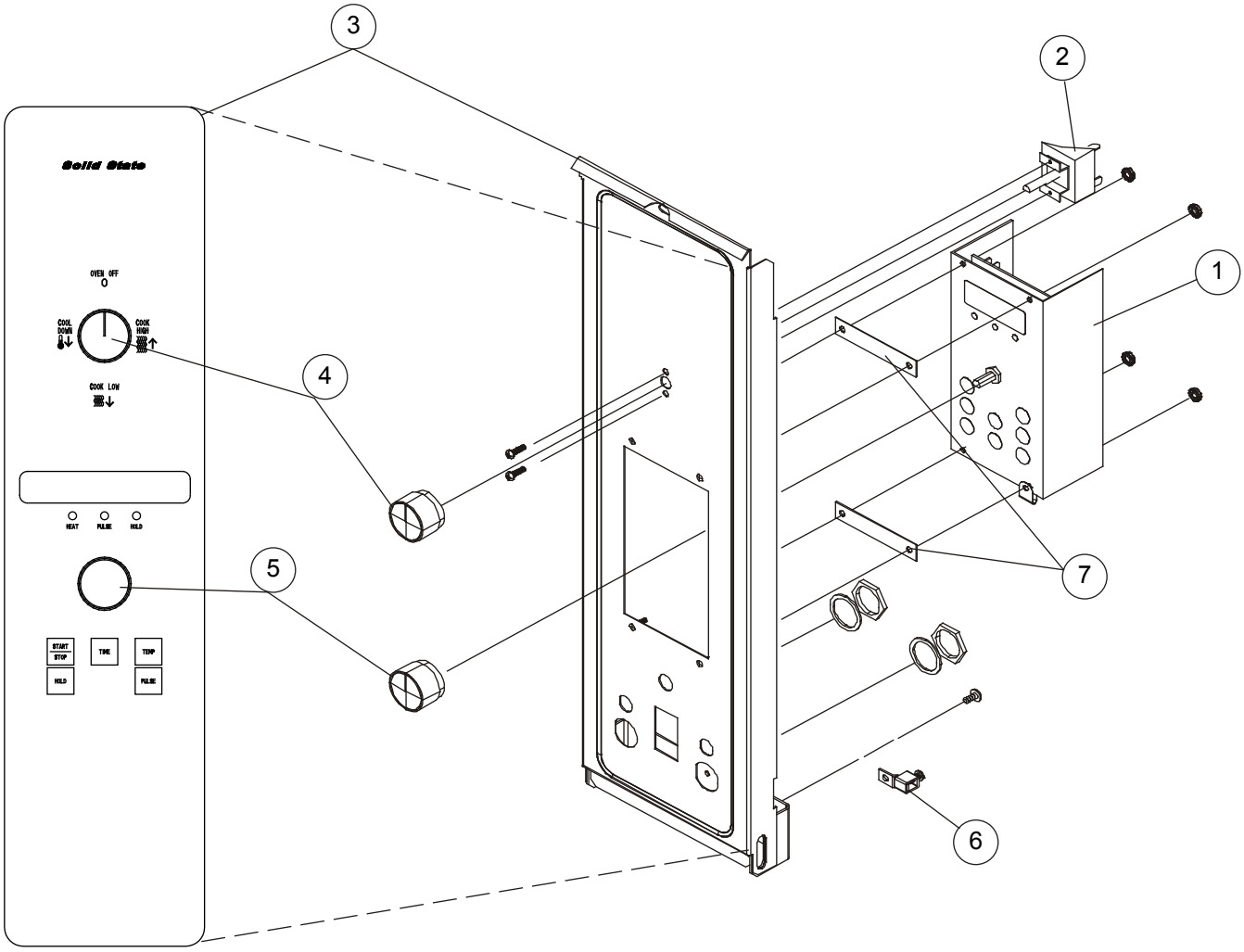

Ref. No.	Part No.	Description
1	30658	Controller, Digital Time & Temp
	18588	Probe, Temperature (pictured on page 3, #17)
2	18868	Selector Switch, 3 pos.
	30662	Momentary Light Switch
3	30663	Control Panel & Decal Assy.
4	24684	Knob, Mode Selector (for 30658)
5	24685	Knob, Adjust
	20348	Spark Box LP & Nat
	34689	Capacitor Assy., Snubber (After 1/21/99 or S.N. 012199SA044T)
6	4888	Grounding Lug
	19306	Harness, Wiring (in rear)
7	24931	Spacers, Control Qty 2

INTELLITOUCH CONTROLS

17 KEY

Ref. No.	Part No.	Description
		NOTE: Intellitouch/hold Controllers are no longer available. Please see page 9 for IQ2 conversion kit information.
	20360	Probe, Temperature Integrated
	20112	RFI Filter (Used w/ Integrated Controller)
	19341	Relay, SPDT, 24V
	19393	Control Panel & Decal Assy.
	18934	Spacer, Aluminum (Qty 6)

INTELLIHOLD CONTROLS

12 KEY

Ref. No.	Part No.	Description
		NOTE: Intellitouch/hold Controllers are no longer available. Please see page 9 for IQ2 conversion kit information.
	23392	Temperature Probe,
	19620	Switch, Rocker, DPST, Black
	19341	Relay, SPDT, 24V
	19306	Wiring Harness, rear

FAN DELAY WITH PULSE PLUS

Ref. No.	Part No.	Description
	18290	Timer, 10 Minute, 115V
	18292	Timer, 30 Minute, 120V
	21051	Timer, Solid State, Pulsing, 30 Second, 120V
	15709	Indicator Light, 125V, Amber, Round
	15673	Indicator Light, 125V, Red, Round
	18587	Relay, 3PDT, 120V w/ Bracket

COOK & HOLD CONTROLS

Ref. No.	Part No.	Description
	17864	Timer, 12 Hour w/o Knob (After 7/87)
	16686	Knob, Timer
	15365	Thermostat, Hold KX-274-36 (Before 7/87)
	16392	Knob, Hold Thermostat
	20351	Temperature Controller, Hold (150º - 250º (After 7/87)
	16686	Knob, Hold Temperature Controller
	20347	Mode Selector Switch w/o Knob
	16686	Knob, Mode Selector Switch
	15709	Indicator Light, 125V, Amber, Round (Hold)
	90043	Relay, Motor, DPDT
	18587	Relay, 120V, 3PDT, 30 AMP (After 7/87)

COMPUTER READY OVENS

Ref. No.	Part No.	Description
	16645	Probe, Temperature (2 Wires) for 8 Set Point and Infinite Boards
	17925	Cable Extension (For Sgl Oven)

SIMPLETOUCH CONTROL

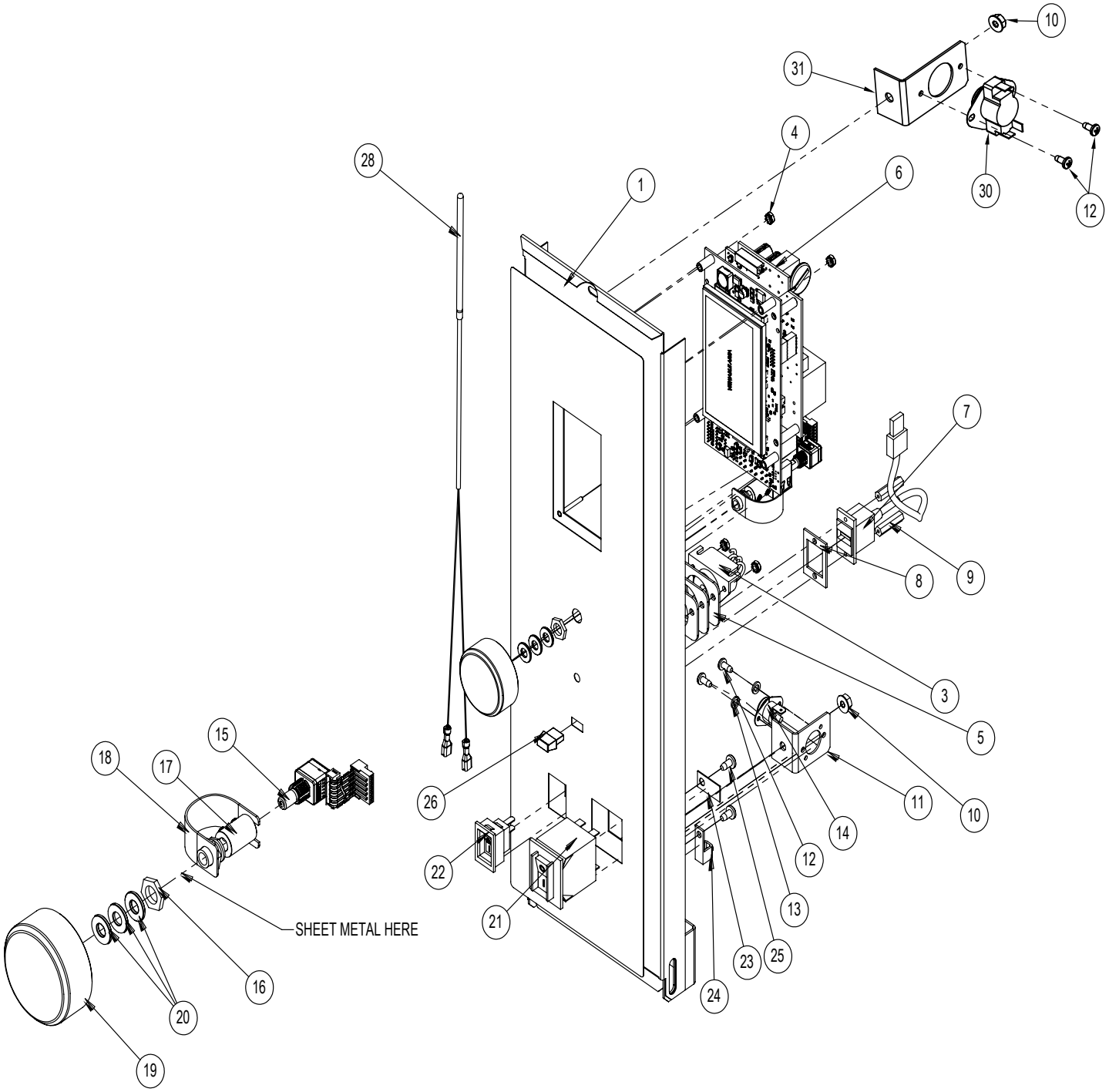

SIMPLETOUCH CONTROL

Ref. No.	Part No.	Description	Quantity
1	100462	CONTROL PANEL & DECAL ST, DFG50/CTB	1
2	100454	DECAL, CTB TOUCH CONTROL	1
3	53759	BUZZER, REMOTE	1
4	R5481	NUT, KEPS #4-40	6
5	53921	SPACER, REMOTE BUZZER	3
6	100896	PRGM CTRL, ST HS CONV, 1SP	1
6	101023	PRGM CTRL, DFG50 BOJANGLES CORE MENU	1
	101773	PRGM CTRL, DFG50, BOJANGLES, EXPANSION MENU	1
	101943	PGRM CTRL, DFG50, BUFFALO WILD WINGS	1
7	59565	USB CABLE, STRAIGHT	1
8	59280	SPACER, FLUSH USB	1
9	59434	STANDOFF, #4-40X1"	2
10	M3950	#10-24 HEX FLANGED NUT	2
11	56792	BRACKET, THERMAL SWITCH	1
12	20785	SCREW, TAP, 8-32 x 3/8, PH PAN HEAD	4
13	1296	WASHER, LOCK	2
14	56760	THERMAL SWITCH, MANUAL RESET	1
15	59282	ENCODER, MANUAL CONTROL	1
16	60337	SHAFT, LEAD IN	1
17	59439	COUPLING, 1/4", SET SCREW.	1
18	60342	PLASTIC BRACE	1
19	60344	KNOB, ENCODER	1
20	R0732	WASHER, FLAT, #10	3
21	39688	CIRCUIT BREAKER, 20A	1
22	36376	SWITCH, GAS, ON/OFF	1
23	16371	PLATE, MOUNTING	1
24	4888	GROUND LUG	1
25	4812	SCREW, MACH, #10 x 3/8	2
26	100330	DUST COVER, USB	1
27	100905	HARNESS, DFG 50 ST CTRL	1
	102490	HARNESS, DFG 50 ST CTRL, W/ SNAP	1
	102491	HARNESS, DFG 50 ST REAR, W/ SNAP	1
28	56873	PROBE, 1K RTD 3/16 TERM	1
29	101733	FUSE, 2A 1/4" x 1-1/4" (NOT SHOWN)	1
30	36755	SWITCH, THERMAL SPDT	1
31	37488	BRACKET, THERMAL SWITCH	1

CH102 CONTROLS
14 KEY

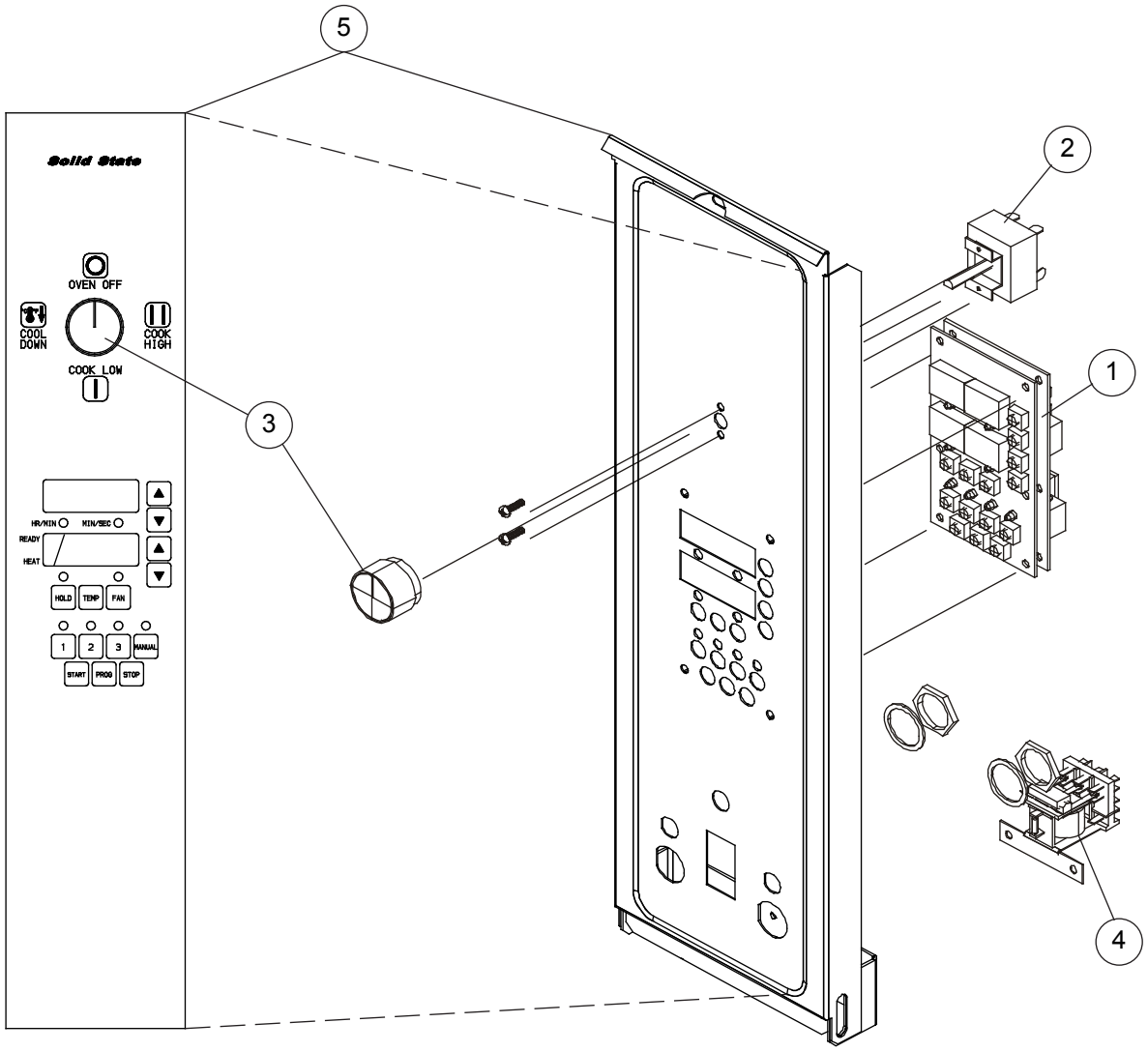

Ref. No.	Part No.	Description
1	37087	Controller, CH102 14 Key
	34473	Probe, RTD 36"
2	18868	Mode Selector Switch, 3 Position
3	24684	Knob, Adjust for Mode Selector Switch Qty 1
4	18587	Relay & Bracket, 3PDT 120V Qty 1
	18582	Relay, SPDT 240V
	16563	Relay Bracket Only
5	36061	Control Panel & Decal Assy, CH102

IQ2 CONTROLS

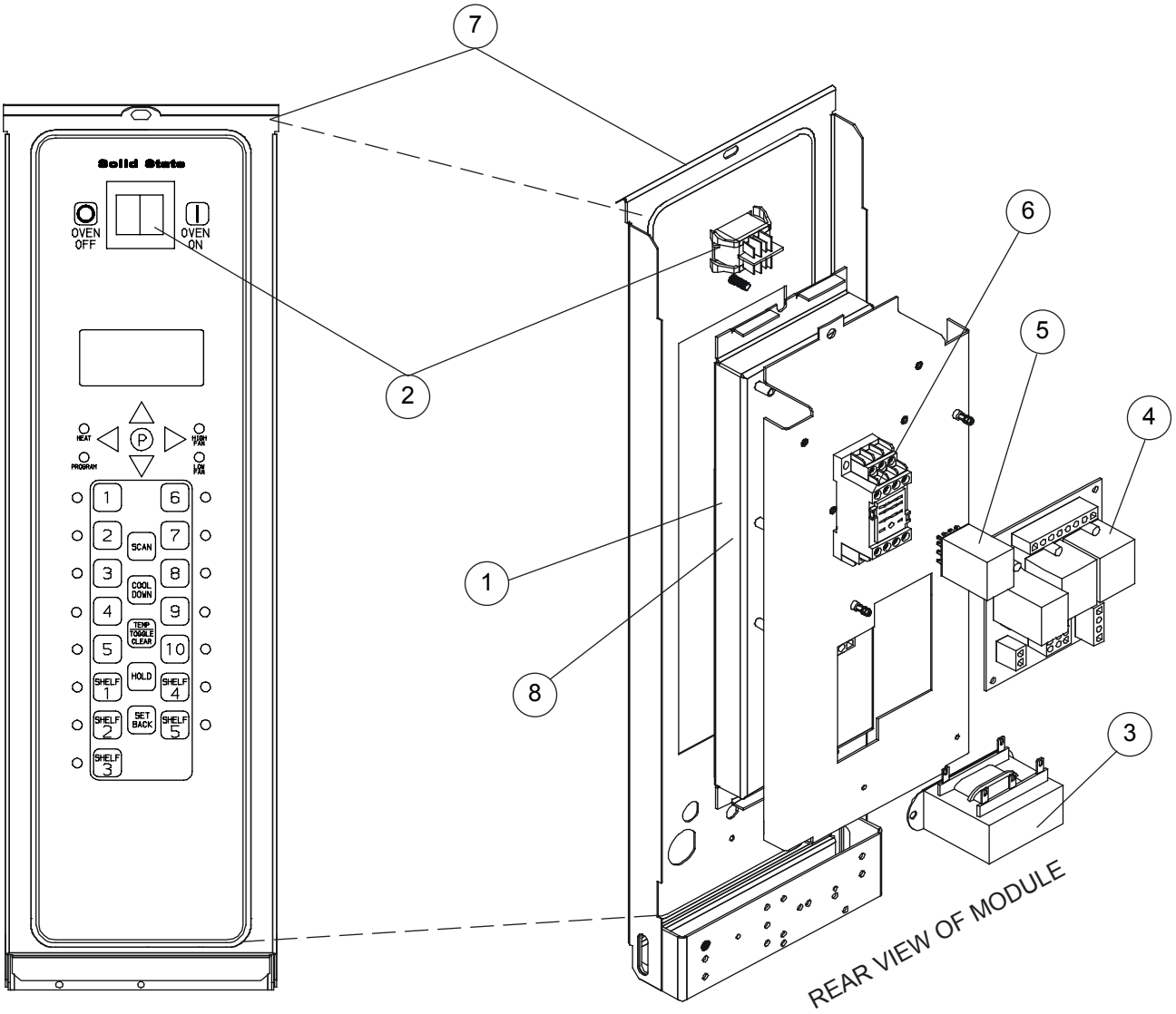

Ref. No.	Part No.	Description
1	50736	Controller, IQ2 (After 07/20/2007)
	51059	Controller, IQ2 (Before 07/20/2007)
		NOTE: For ovens made prior to 07/20/2007 51059 includes new panel and decal
	33074	Probe, RTD
2	19619	Switch, Rocker, DPST
3	20355	Transformer
4	33073	Relay Board
5	36297	Relay, 4PDT, 3A, 120V
6	33922	Relay, Socket
	19306	Harness, Wiring (in control compartment)
	36247	Harness, Control IQ2
	33072	Harness, Control 24V
7	37708	Panel & Decal Assy (Before 07/20/2007)
	51058	Panel & Decal Assy (After 07/20/2007)
	36728	IQ2 Conversion Kit (From Intellitouch & Intellihold) 1 SP 1 PH

EXCLUSIVE TO BOB EVANS

BELOW KITS ARE PROGRAMMED EXCLUSIVLEY FOR BOB EVANS. NOT FOR GENERAL MARKET SALE!

Ref. No.	Part No.	Description
8	37000	Controller, IQ2, (After 07/20/2007)
	51060	Controller IQ2, (Beore 07/20/2007)
		NOTE: for ovens made prior to 07/20/2007 51060 includes new panel and decal
	37037	IQ2 Conversion Kit (From Intellitouch) 1 SP, 1 PH

BURNER & PIPING COMPONENTS

Ref. No.	Part No.	Description
	19968	Burner Assy., (After 3/86)
	19409	Orifice, Main Burner (Specify Model & Gas Type)
	16361	Air Shutter Only
	3001	Locknut, Air Shutter
	3807	Union, 1/2" Female
	1949	Nipple, 1/2" x Close
	597	Ell, 90º Black
	10252	Union, Ell 1/2"
	21545	Manifold Tube Assy., (After 3/86)
	21547	Ignitor Shield (After 3/86)
	11508	Control Stack Nipple 1/2" x 4"

DOOR COMPONENTS
(Except Bojangles)

Ref. No.	Part No.	Description
MANUFACTURED 9/84 and After		
♦	18404	Door Assy, Gls, LH Hinge
♦	18405	Door Assy, Sld, LH Hinge
♦	19609	Door Assy, Gls, RH Hinge
♦	19610	Door Assy, Sld, RH Hinge
NOTE: Door assemblies do not include part # 17865 (Roller latch). Please order this part separately.		
	9036	Window Assy, Door (17-1/8" x 10-1/8")
	17865	Latch, Roller w/ Screws (on Oven (Manufactured after 9/84)
	17946	Catch, Door Roller Assy w/ Screws (on door (Manufactured after 9/84)
	90087	Door Catch, Spring Clip (Manufactured before 9/84)
	8589	Door Handle, 13"
	17862	Perimeter Gasket, Door (Manufactured after 9/84 and before 9/26)
	102253	Kit, Gasket Replacement, Roller Latch (Manufactured after 9/26)
♦	101740	Door Switch Upgrade Kit (Before 6/24)
	17336	Perimeter Gasket, Door (Manufactured before 9/84)
	17337	Lower Hinge Pin w/ Fasteners, Door (Before 6/24)
	101648	Lower Door Pin (After 6/24)
	8594	Upper Hinge Pin, Door
	90017	Washers, Door (Set of 2)
	90004	Bushings, Upper Door Hinge (Set of 2)
	8633	Cam Assy., Door Switch (Before 6/24)
	101620	Cam, Door Switch (After 6/24)

DOOR COMPONENTS
(Bojangles)

Ref. No.	Part No.	Description
	18405	Door Assy, Solid LH Hinge (before 11-15-16)
	58787	Door Assy, Solid LH Hinge w/Handle (after 11-15-16)
	59748	Door Catch, Complete w/hardware (after 11-15-16)
	8589	Door Handle, 13" (before 11-15-16)
	R3993	Door Handle (after 11-15-16)
	8594	Upper Door Pin w/hardware
	17337	Lower Door Pin w/hardware (Before 6/24)
	101648	Lower Door Pin (After 6/24)
	17865	Latch, Roller w/screws, on oven (before 11-15-16)
	17946	Catch w/screws, on door (before 11-15-16)
	17862	Perimeter Gasket, Door (before 11-15-16)
	59272	Perimeter Gasket, Door (after 11-15-16 and before 3-25-25)
	101745	Gasket Assy, Silicone, One Piece, DFG50 (Manufactured After 3-25-25)
	101620	Cam, Door Switch (After 6/24)
	101956	Kit, Bojangles Gasket Conversion
	101985	Kit, Bojangles Gasket Conversion, RH Hinge

BAKING COMPARTMENT COMPONENTS

Ref. No.	Part No.	Description
	22637	Rack, w/ball stops, Each (20-7/8" x 14-5/8")
	8590	Rack Support (Set of 2) (Before 8/91)
	31311	Rack Support (Set of 2) (After 8/91)
19	16994	Blower Wheel Assy.
	35934	Interior Baffle & Bracket Kit Blower Wheel Cover, Porc. Replaces 16990
	16987	Interior Baffle, Blower Wheel Cover) S/S

STANDS

Ref. No.	Part No.	Description
	11993	Stand, 5-3/4" S/S w/legs
	37774	Stand, 5-3/4" S/S w/casters
	10857	Stand, 7" S/S
	34024	Stand, 11" Stainless w/Shelf & Adjustable Casters
	18479	Stand, 16" S/S w/ Shelf
	10856	Stand, 19" S/S w/ Shelf
	10855	Stand, 24" S/S w/ Shelf
	10854	Stand, 33" S/S w/ Shelf
	18482	Stand, 16" S/S w/ Shelf & Casters
	11437	Stand, 19" S/S w/ Shelf & Casters
	15151	Stand, 24" S/S w/ Shelf & Casters
	15153	Stand, 33" S/S w/ Shelf & Casters
	16002	Casters (Set of 4)
	20435	Legs, 4" w/ Bolts, Ptd (Set of 4)

EXTERIOR OVEN COMPONENTS

Ref. No.	Part No.	Description
		For Units With SA Serial Code
	6433	Crown Assy.
	90086	Nameplate, Blodgett
	17032	Combustion Compartment Cover, LH Hinge
	30996	Combustion Compartment Cover, RH Hinge
	21600	Access Panel, S/S (Removeable Bodyside (Units before 7/1/98)
	34521	Access Panel, S/S (Removeable Bodyside (Units after 7/1/98)
	30990	Draft Diverter, Canopy Vent, S/S
	30989	Drafthood, Direct Vent (6" Dia.) S/S
	57552	Kit, Air Intake Upgrade (Snorkel)
	59426	Heat Shield Kit
		For Units With SB Serial Code
	101638	RH Bodyside, DFG50
	102044	Trim, Control Module
	101637	LH Bodyside, Removable
	101589	Bodytop S/S, CTB/DFG50
	101593	Trim, Top, CTB/DFG50
	101885	Top Trim, LH DFG50
	101998	Top Trim, RH DFG50
	101635	Bodyback, DFG50
	6415	Vent, Steam
	90086	Nameplate, Blodgett
	57552	Kit, Air Intake Upgrade (Snorkel)
	17032	Combustion Compartment Cover, LH Hinge
	30996	Combustion Compartment Cover, RH Hinge

EXCLUSIVE TO EXPORT

Ref. No.	Part No.	Description
	20356	Transformer, 230V to 240V
	21430	Axial Fan, 230V (Before 8/13/90)

Ref. No.	Part No.	Description
	23034	Axial Fan, 240V (After 8/13/90)
	20084	Timer, 60 Minute, 240V
	18582	Relay, 3PDT, 240V
	16539	Indicator Light, 250V, Amber, Round
	56465	Pilot Burner & Ignitor Assy, Nat CE
	56466	Pilot Burner & Ignitor Assy, LP/But CE
	22989	Fuseblock
	M9182	Dual Solenoid/Pressure Regulator, Nat
	59123	Motor, 115, 1 PH, 1/2 HP, 1 SP
	57859	Motor, 208-240V, 1/2 HP, 1 SP
	53009	Ignition Control, Landis & Gyr
	M3172	Timer, Fixed 2 Second
	36066	Thermostat, High Limit Kit (Manual Reset) CE Replaces M3295
	M9422	Air Pressure Differential Switch, switch only CE
	M9705	Polyurethane Tubing, used w/pressure switch (Per Inch, Total 36") CE
	30658	Solid State Digital Controller
	18588	Probe, Temperature
	30517	Switch, Rocker DPST, Black
	18578	Temperature Control Board (Solid State Manual)
	18234	Potentiometer, Remote (Infinite Control)
	16037	Light, Indicator 250V, Red, Round
	20348	Spark Box, export
	57530	Panel & Decal, Solid State Digital - CE