IMV-3E & IMV-4E

IMVECTION OVEN

REPLACEMENT PARTS LIST

EFFECTIVE OCTOBER 6, 2026

Superseding All Previous Parts Lists.
The Company reserves the right to make substitution in the event that items specified are not available.
ERRORS: Descriptive and/or typographic errors are subject to correction.

BLODGETT OVEN COMPANY
42 Allen Martin Drive, Essex Junction, Vermont 05452 USA Telephone: (802) 658-6600 Fax: (802) 860-3732
www.blodgett.com

P/N 110549 REV J (10/26)

SERIAL NUMBER LOCATION / KEY:

IMPORTANT: When ordering parts, please provide the model and serial number of the oven. The identification plate is located on the back of the oven.

SERIAL NUMBER EXAMPLES

071924XXX-00000000000000000001

07/19/24 = DATE

VXS = LETTER CODE FOR IMV-4E

VYS = LETTER CODE FOR IMV-3E

001 = FACTORY SEQUENCE

TO OBTAIN LITERATURE:

Email: literature@blodgett.com
or visit
www.blodgett.com

TABLE OF CONTENTS

EXTERIOR IMV-4E 4

EXTERIOR IMV-3E 6

DOOR COMPONENTS
RIGHT HAND HINGE IMV-4E 10

DOOR COMPONENTS
LEFT HAND HINGE IMV-4E 12

DOOR COMPONENTS
RIGHT HAND HINGE IMV-3E 14

DOOR COMPONENTS
LEFT HAND HINGE IMV-3E 16

SHUFFLE MOTOR IMV-4E & IMV-3E 18

CONTROL PANEL IMV-4E & IMV-3E 20

ELECTRICAL COMPARTMENT IMV-4E 22

ELECTRICAL COMPARTMENT IMV-3E 24

ELECTRICAL COMPARTMENT TERMINAL BLOCK ASSEMBLY
IMV-4E & IMV-3E 26

BLOWER MOTOR IMV-4E & IMV-3E 28

HEATING ELEMENTS IMV-4E & IMV-3E 30

IMV4E CE SPECIFIC PARTS 32

IMV3E CE SPECIFIC PARTS 34

ELECTRICAL COMPARTMENT TERMINAL BLOCK ASSEMBLY
IMV-4E & IMV-3E 36

STAND 38

ACCESSORIES 40

EXTERIOR
IMV-4E

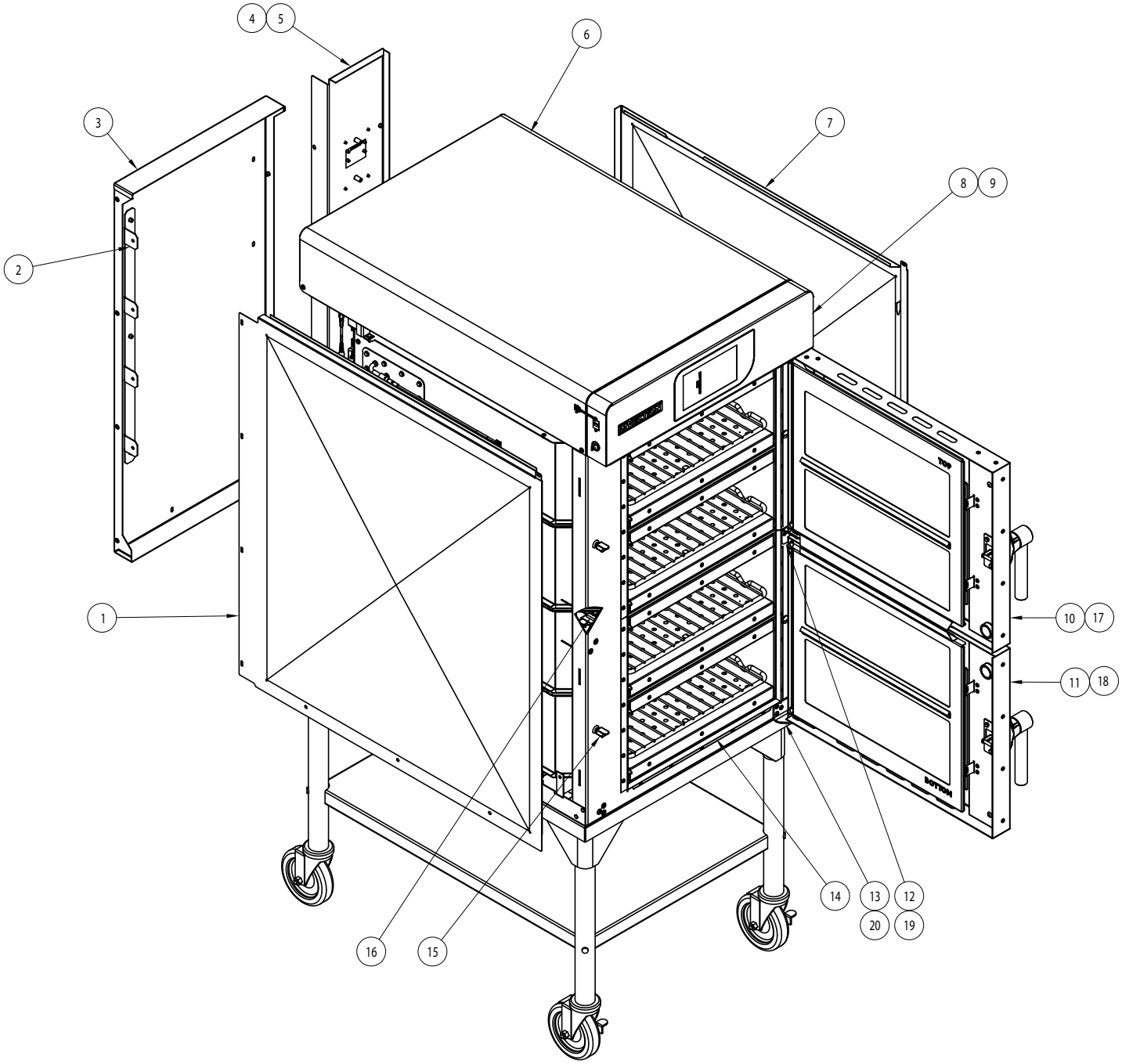

EXTERIOR
IMV-4E

Item	P/N	Description
1	110269	LEFT HAND BODY SIDE
2	110267	WIRE WRANGLER
3	110268	MIDDLE BACK, IMV4E
4	110530	COOLING AIR EXHAUST SPLASH GUARD
5	110572	REPLACEMENT KIT, RH BACK
6	110258	TOP ENCLOSURE
7	110265	RIGHT HAND BODY SIDE
8	110568	KIT, CONTROL PANEL REPLACEMENT
9	110569	KIT, FULL CONTROL PANEL REPLACEMENT
10	110559	TOP DOOR, FULL REPLACEMENT KIT, RHH
11	110561	BOTTOM DOOR, FULL REPLACEMENT KIT, RHH
12	110584	KIT, MIDDLE DOOR HINGE REPLACEMENT, RHH
13	110585	KIT, BOTTOM DOOR HINGE REPLACEMENT, RHH
14	110571	KIT, GASKET REPLACEMENT (BEFORE 5/1/2026)
14	110776	KIT, GASKET REPLACEMENT (AFTER 5/1/2026)
15	110458	DOOR LATCH CATCH, SINGLE
16	110567	KIT, DOOR SWITCH REPLACEMENT
17	110375	TOP DOOR, FULL REPLACEMENT KIT, LHH
18	110376	BOTTOM DOOR, FULL REPLACEMENT KIT, LHH
19	110367	KIT, MIDDLE DOOR HINGE REPLACEMENT, LHH
20	110368	KIT, BOTTOM DOOR HINGE REPLACEMENT, LHH

EXTERIOR
IMV-3E

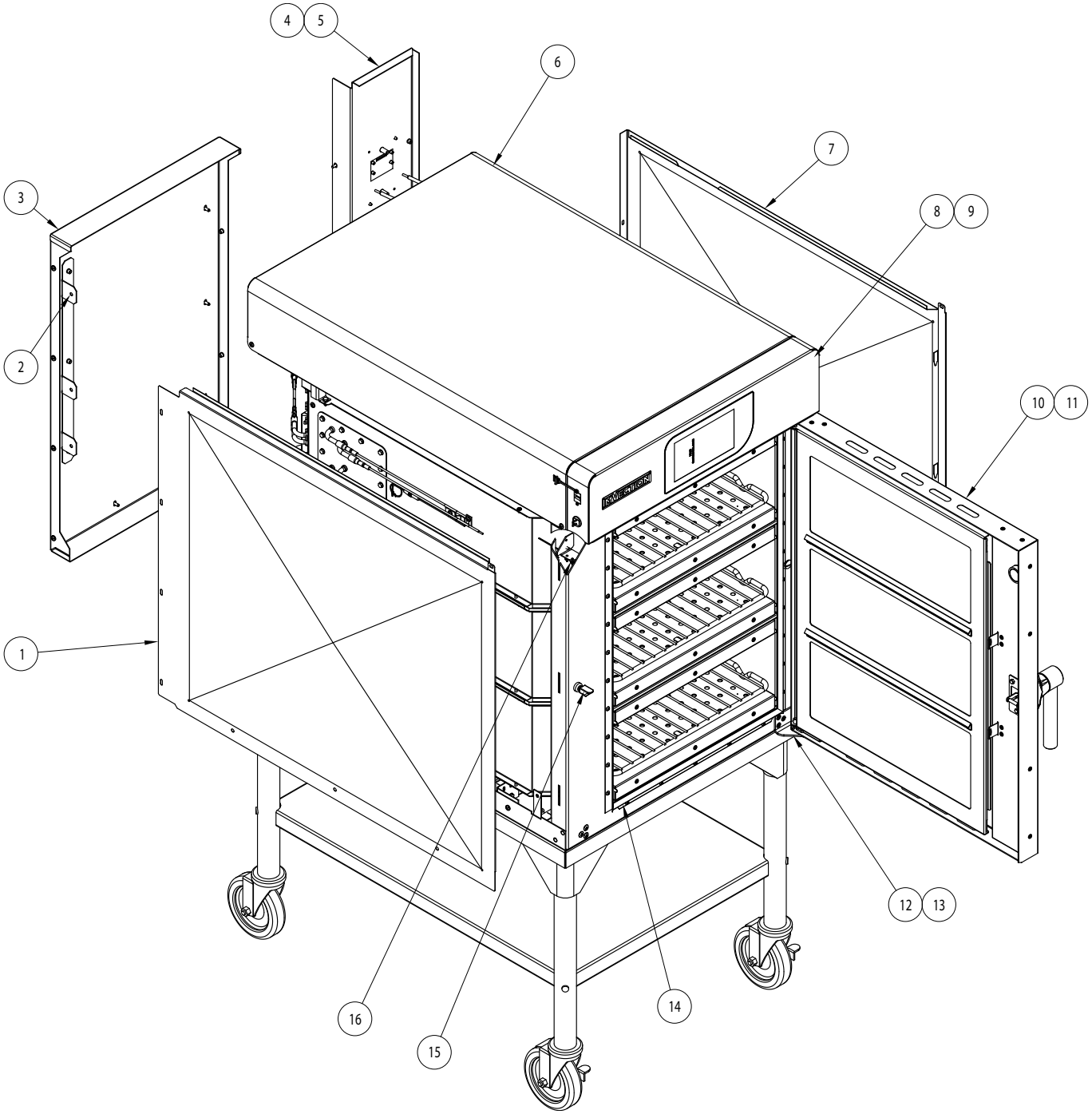

EXTERIOR
IMV-3E

Item	P/N	Description
1	110614	LEFT HAND BODY SIDE, IMV3E
2	110628	WIRE WRANGLER, IMV3E
3	110616	MIDDLE BACK, IMV3E
4	110530	COOLING AIR EXHAUST SPLASH GUARD
5	110691	REPLACEMENT KIT, RH BACK, IMV3E
6	110258	TOP ENCLOSURE
7	110613	RIGHT HAND BODY SIDE, IMV3E
8	110568	KIT, CONTROL PANEL REPLACEMENT
9	110682	KIT, FULL CONTROL PANEL REPLACEMENT, IMV-3E
10	110626	FULL DOOR REPLACEMENT, IMV-3E, RHH
11	110679	FULL DOOR REPLACEMENT, IMV-3E, LHH
12	110256	BOTTOM HINGE REPLACEMENT, IMV-3E, RHH
13	110358	BOTTOM HINGE REPLACEMENT, IMV-3E, LHH
14	110685	KIT, GASKET REPLACEMENT, IMV-3E
15	110458	DOOR LATCH CATCH, SINGLE
16	110567	KIT, DOOR SWITCH REPLACEMENT

INTERNAL CAVITY
IMV-4E & IMV-3E

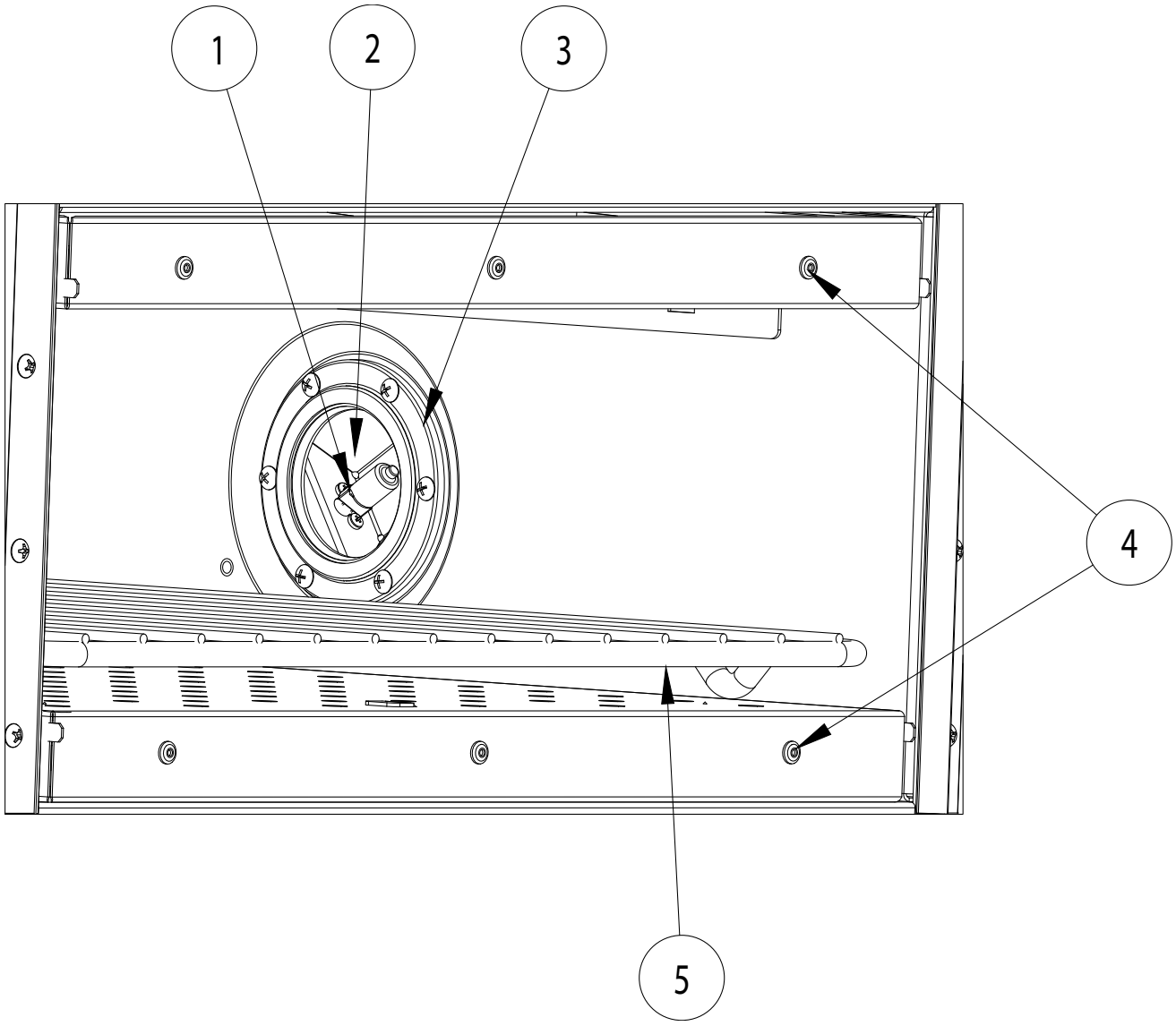

INTERNAL CAVITY
IMV-4E & IMV-3E

Item	P/N	Description
1	110486	REPLACEMENT BULB
2	110558	LIGHT SOCKET ASSEMBLY
3	110557	LIGHT LENS REPLACEMENT KIT, IMV4E
4	110327	ASSY, JET PLATE
5	110281	WIRE RACK
NS	110596	SHUFFLE ROD REPLACEMENT KIT

DOOR COMPONENTS
RIGHT HAND HINGE
IMV-4E

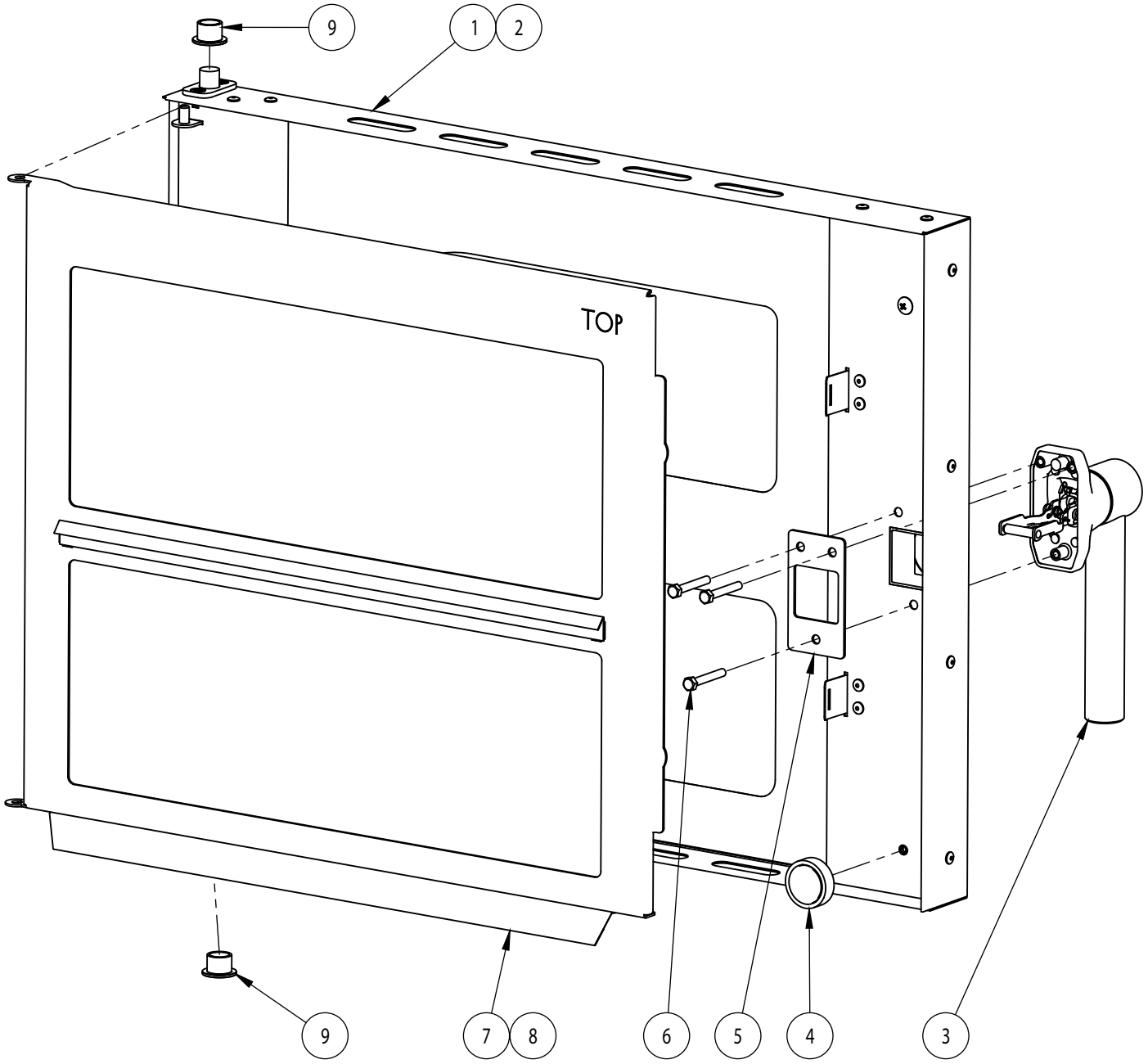

NOTE: Top door shown. Bottom door similar

DOOR COMPONENTS
RIGHT HAND HINGE
IMV-4E

Item	P/N	Description
1	110560	TOP OUTER DOOR REPLACEMENT KIT
2	110562	BOTTOM OUTER DOOR REPLACEMENT KIT
3	110459	DOOR HANDLE
4	110591	MAGNET AND CUP ASSEMBLY
5	63672	PLATE, HANDLE, SQUARE
6	61932	BOLT M5 X 35mm LONG
7	110307	TOP INNER DOOR
8	110323	BOTTOM INNER DOOR
9	110583	KIT, DOOR BEARING REPLACEMENT

DOOR COMPONENTS
LEFT HAND HINGE
IMV-4E

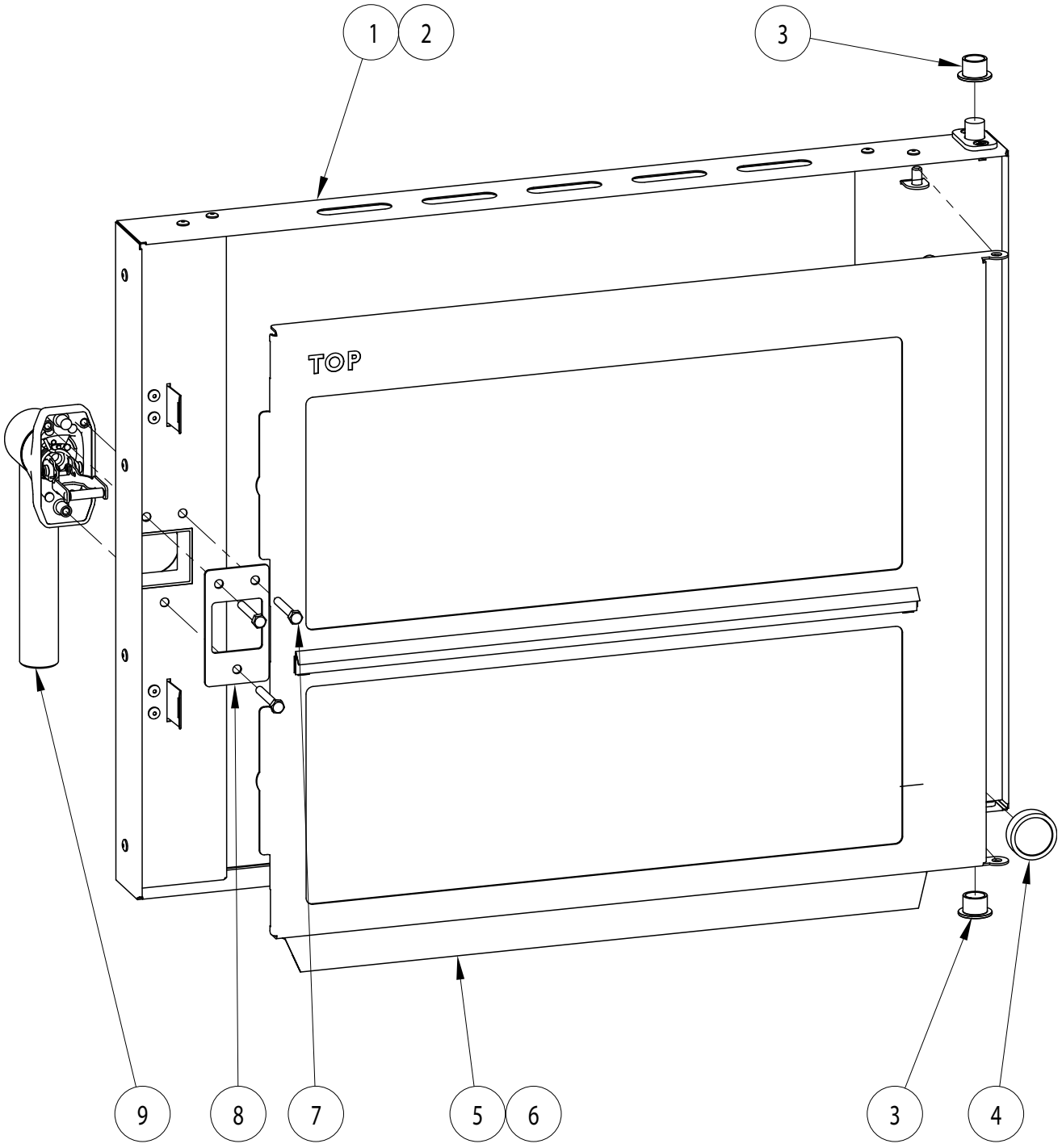

NOTE: Top door shown. Bottom door similar

DOOR COMPONENTS
LEFT HAND HINGE
IMV-4E

Item	P/N	Description
1	110376	TOP OUTER DOOR REPLACEMENT KIT
2	110378	BOTTOM OUTER DOOR REPLACEMENT KIT
3	110583	KIT, DOOR BEARING REPLACEMENT
4	110591	MAGNET AND CUP ASSEMBLY
5	110349	TOP INNER DOOR
6	110355	BOTTOM INNER DOOR
7	61932	BOLT M5 X 35mm LONG
8	63672	PLATE, HANDLE, SQUARE
9	110459	DOOR HANDLE

DOOR COMPONENTS
RIGHT HAND HINGE
IMV-3E

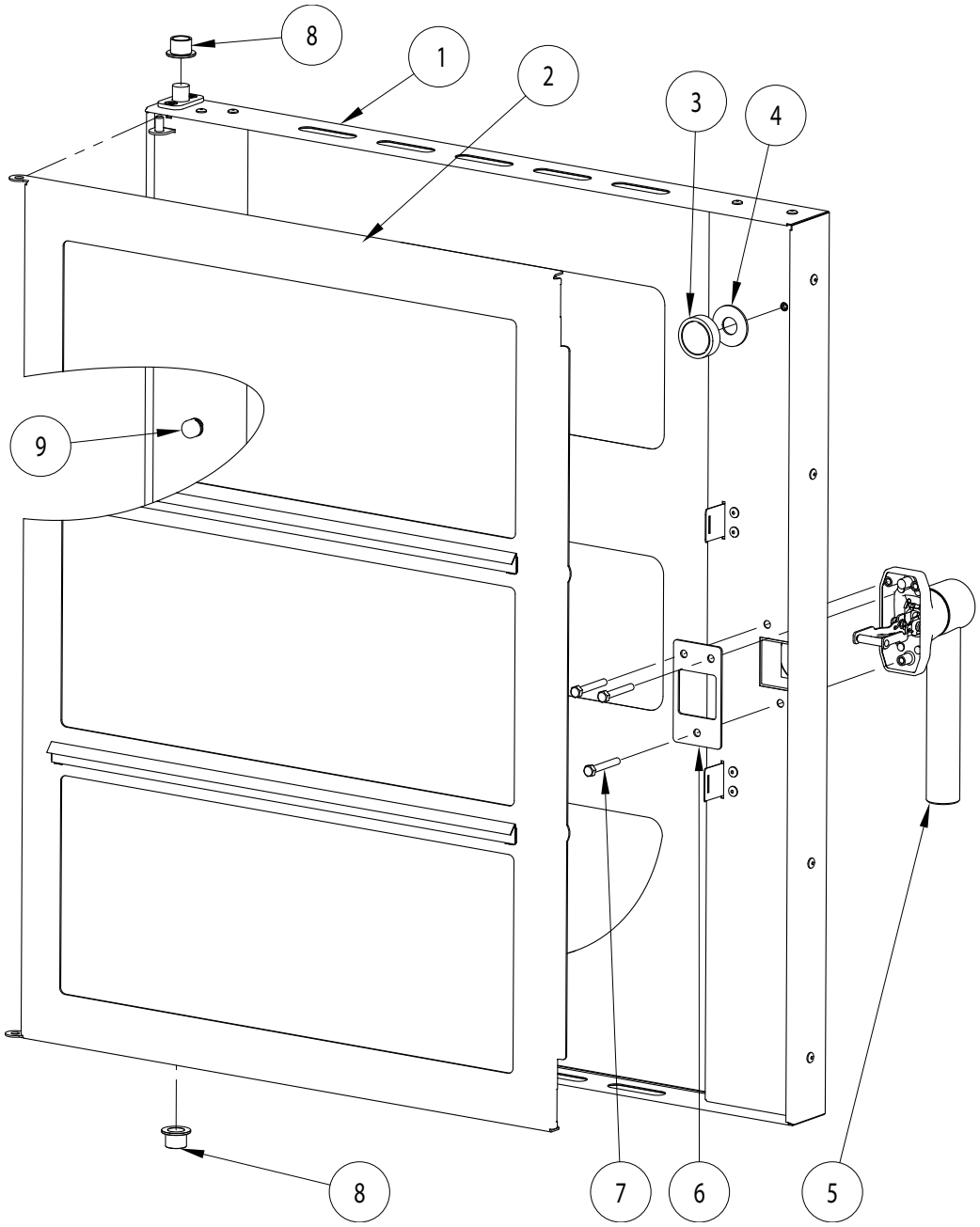

DOOR COMPONENTS
RIGHT HAND HINGE
IMV-3E

Item	P/N	Description
1	110689	OUTER DOOR REPLACEMENT KIT, IMV3E, RHH
2	110625	INNER DOOR, IMV3E, RHH
3	110591	MAGNET AND CUP ASSEMBLY
4	70147	WASHER, 1/2" FLAT
5	110459	DOOR HANDLE
6	63672	PLATE, HANDLE, SQUARE
7	61932	BOLT, M5 X35MM LONG
8	110688	KIT, DOOR BEARING REPLACEMENT
9	61036	RUBBER BUMPER

DOOR COMPONENTS
LEFT HAND HINGE
IMV-3E

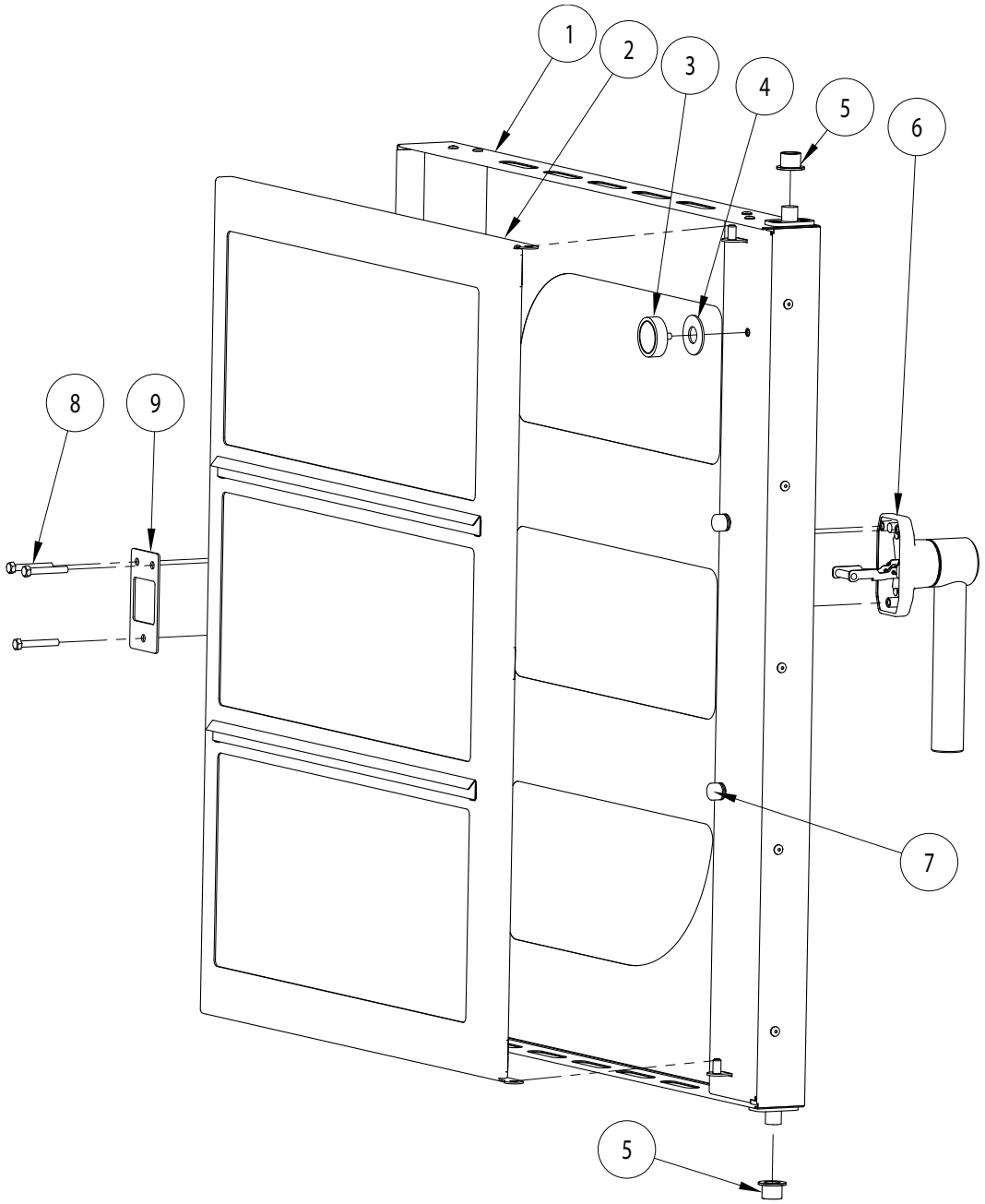

DOOR COMPONENTS
LEFT HAND HINGE
IMV-3E

Item	P/N	Description
1	110690	OUTER DOOR REPLACEMENT KIT, IMV3E, LHH
2	110678	INNER DOOR, IMV3E, RHH
3	110591	MAGNET AND CUP ASSEMBLY
4	70147	WASHER, 1/2" FLAT
5	110688	KIT, DOOR BEARING REPLACEMENT
6	110459	DOOR HANDLE
7	61036	RUBBER BUMPER
8	61932	BOLT, M5 X35MM LONG
9	63672	PLATE, HANDLE, SQUARE

SHUFFLE MOTOR
IMV-4E & IMV-3E

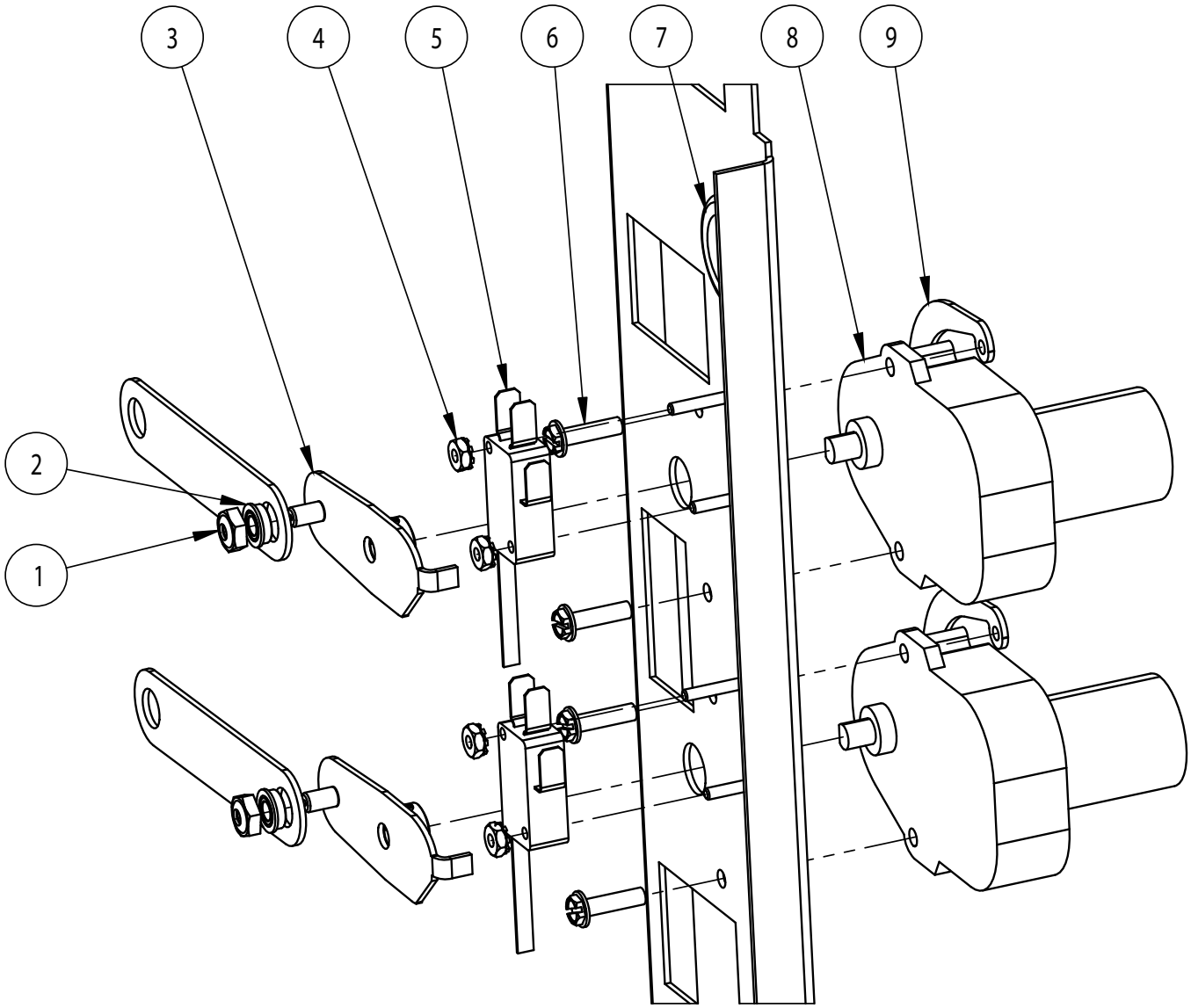

SHUFFLE MOTOR
IMV-4E & IMV-3E

Item	P/N	Description
1	R8891	NUT, 10-32 HEX, NYLON (DO NOT SUBSTITUTE)
2	110574	SHUFFLE MOTOR LINKAGE BEARING REPLACEMENT
3	110575	SHUFFLE MOTOR LINKAGE REPLACEMENT KIT
4	R5481	NUT, KEPS 4-40
5	S0355	SWITCH, LONG ARM SPDT, MICRO
6	SCR500	SCREW, 8-32 X 5/8", HEX FLNG HD
7	19087	GROMMET
8	110573	KIT, SHUFFLE MOTOR REPLACEMENT
9	110369	NUT PLATE, SHUFFLE MOTOR
NS	110487	HARNESS, MTR. SW
NS	110488	HARNESS, SHUFFLE MOTOR
NS	110275	SET SCREW, 10-32 X 1/8" CUP POINT SS

CONTROL PANEL
IMV-4E & IMV-3E

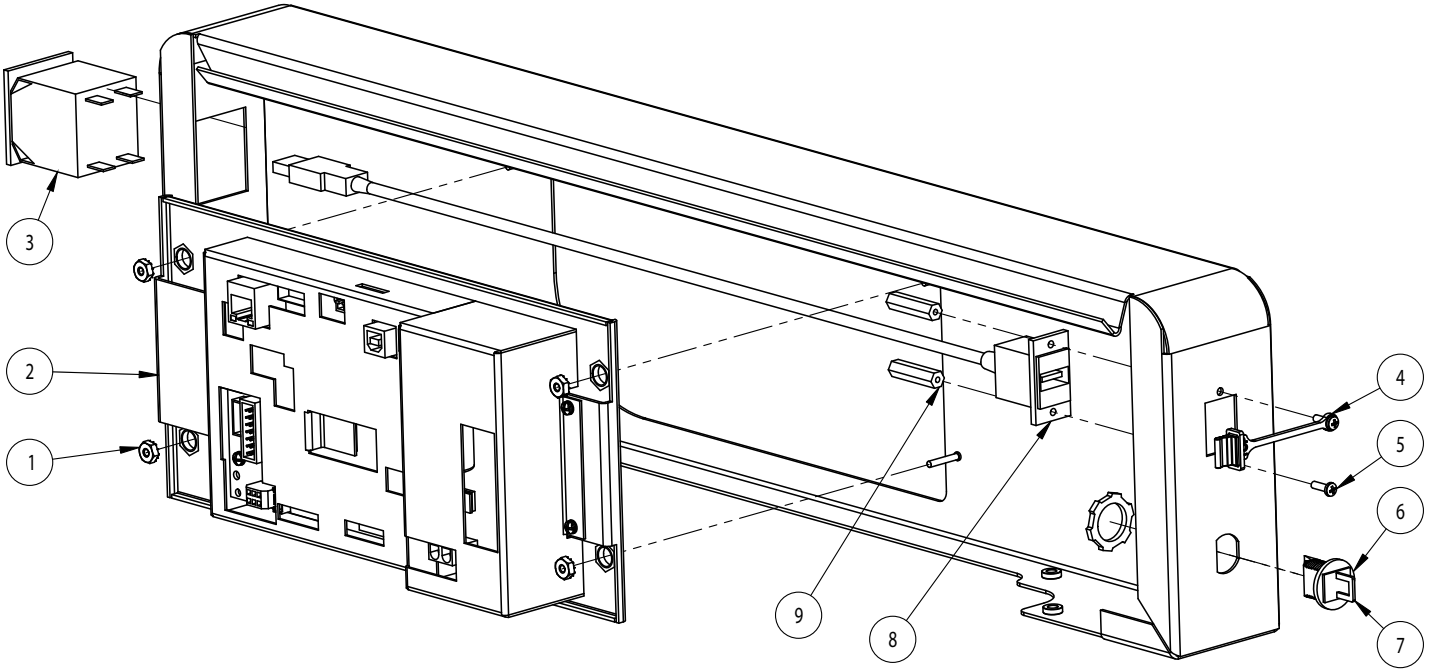

CONTROL PANEL
IMV-4E & IMV-3E

Item	P/N	Description
1	R5481	NUT, KEPS 4-40
2	110570	KIT, CONTROL MODULE REPLACEMENT, IMV-4E (GM)
2	110681	KIT, CONTROL MODULE REPLACEMENT, IMV-3E (GM)
3	39688	CIRCUIT BREAKER, 20A
4	101653	DUST PLUG, USB
5	38840	SCREW, MACH, 4-40 X 3/8", SS PAN HD
6	39781	MEAT PROBE JACK
7	39782	MEAT PROBE JACK PLUG
8	59565	USB CABLE, STRAIGHT
9	59434	STANDOFF, 4-40X1"
NS	110528	DECAL, IMVECTION LOGO

ELECTRICAL COMPARTMENT
IMV-4E

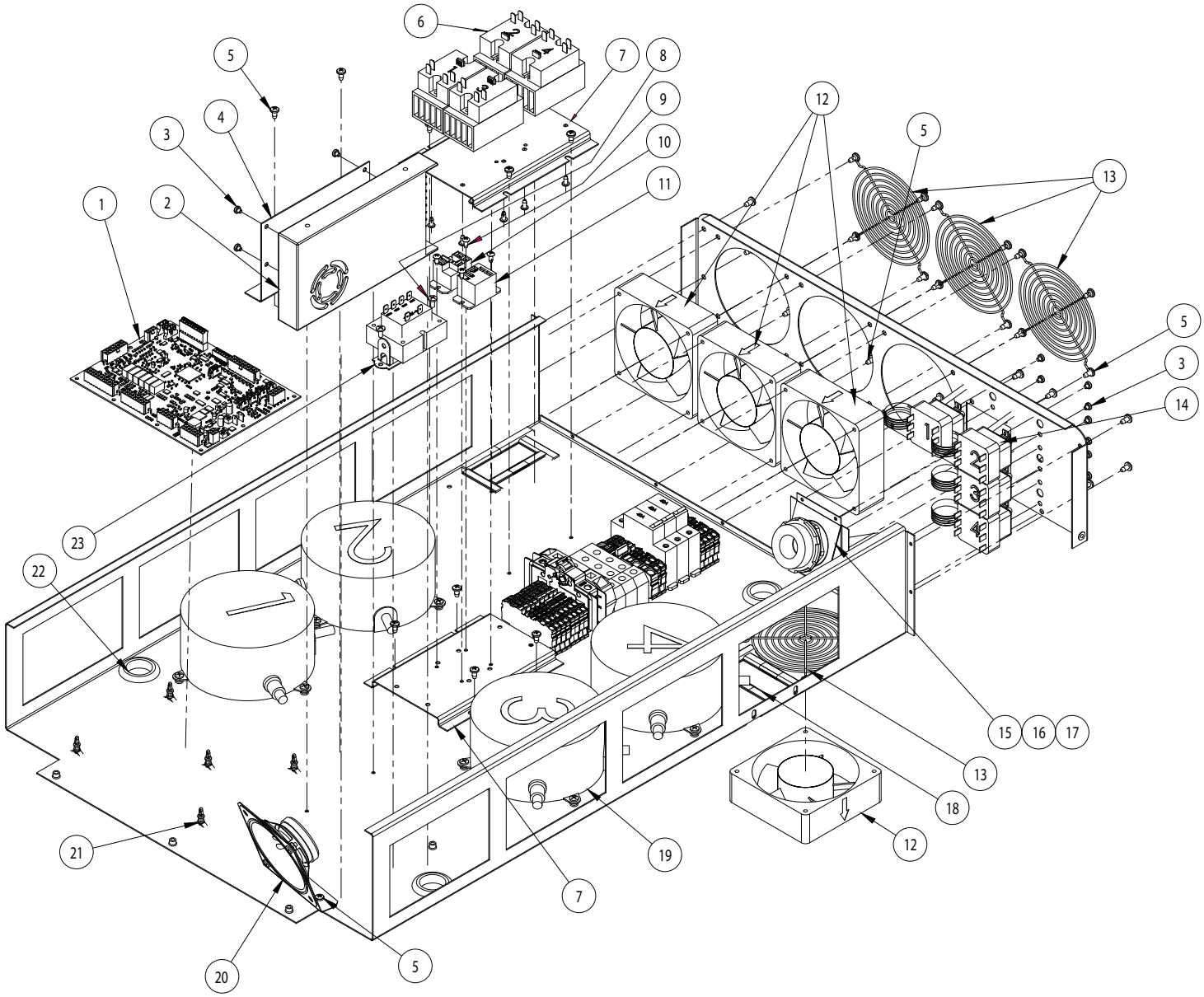

ELECTRICAL COMPARTMENT
IMV-4E

Item	P/N	Description
1	110399	CONTROL BOARD
2	110423	POWER SUPPLY, 350W, 24VDC
3	110266	SCREW, PAN HD, M4, 4mm LONG
4	110462	BRACKET, POWER SUPPLY MOUNT
5	4812	SCREW, 10-16 PAN HEAD
6	110416	SOLID STATE RELAY, 40A 2 POLE
7	110372	BRACKET, RELAY MOUNT
8	39914	SCREW, 8-32 X 3/8 TRUSS HEAD
9	53671	SCREW, 8-32 X 3/8 PAN THD CUT
10	R0174	RELAY CONTROL PSDT 24V
11	R0180	RELAY SPST NO 240V
12	M2212	AXIAL FAN
13	M0571	FAN GUARD, 4"
14	110576	HI-LIMIT REPLACEMENT KIT
15	110254	CORD MOUNT
16	59786	CORD GRIP, STRAIN RELIEF
17	110478	POWER CORD, 6AWG, NEMA 15-50P (NOT DEPICTED)
18	59378	EDGE PROTECTION
19	110342	DRIVER, BLOWER MOTOR
20	110497	KIT, SPEAKER REPLACEMENT
21	18268	SPACER, NYLON
22	72385	GROMMET, 1-3/8"
23	38303	TRANSFORMER
NS	110489	HARNESS, LINE VOLTAGE
NS	110490	HARNESS, DIGI CTRL
NS	101393	COMMUNICATIONS CABLE

ELECTRICAL COMPARTMENT
IMV-3E

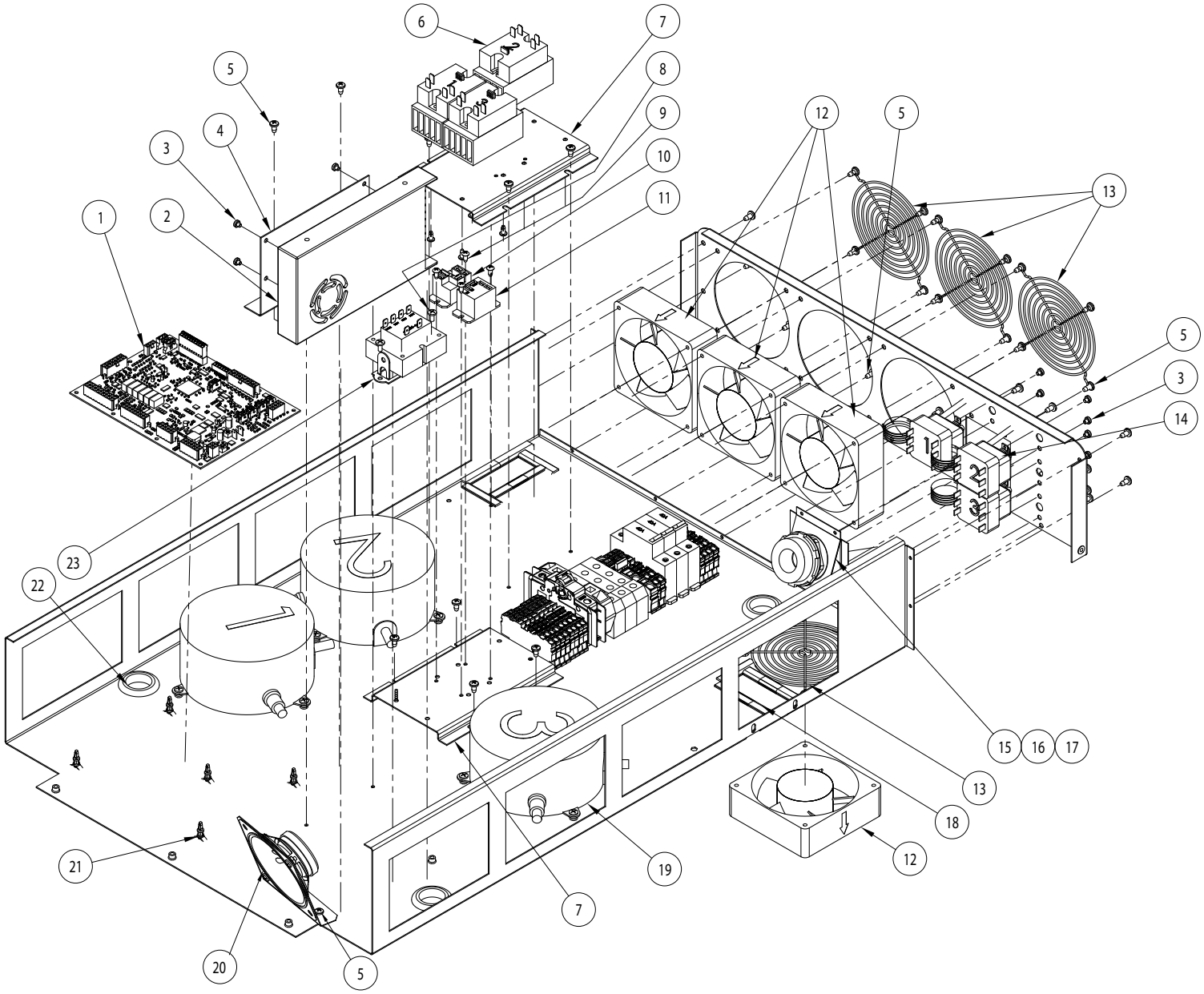

ELECTRICAL COMPARTMENT
IMV-3E

Item	P/N	Description
1	110399	CONTROL BOARD
2	110423	POWER SUPPLY, 350W, 24VDC
3	110266	SCREW, PAN HD, M4, 4mm LONG
4	110462	BRACKET, POWER SUPPLY MOUNT
5	4812	SCREW, 10-16 PAN HEAD
6	110416	SOLID STATE RELAY, 40A 2 POLE
7	110372	BRACKET, RELAY MOUNT
8	39914	SCREW, 8-32 X 3/8 TRUSS HEAD
9	53671	SCREW, 8-32 X 3/8 PAN THD CUT
10	R0174	RELAY CONTROL PSDT 24V
11	R0180	RELAY SPST NO 240V
12	M2212	AXIAL FAN
13	M0571	FAN GUARD, 4"
14	110576	HI-LIMIT REPLACEMENT KIT
15	110254	CORD MOUNT
16	59786	CORD GRIP, STRAIN RELIEF
17	110478	POWER CORD, 6AWG, NEMA 15-50P (NOT DEPICTED)
18	59378	EDGE PROTECTION
19	110342	DRIVER, BLOWER MOTOR
20	110497	KIT, SPEAKER REPLACEMENT
21	18268	SPACER, NYLON
22	72385	GROMMET, 1-3/8"
23	38303	TRANSFORMER
NS	110489	HARNESS, LINE VOLTAGE
NS	110490	HARNESS, DIGI CTRL
NS	101393	COMMUNICATIONS CABLE

ELECTRICAL COMPARTMENT TERMINAL BLOCK ASSEMBLY
IMV-4E & IMV-3E

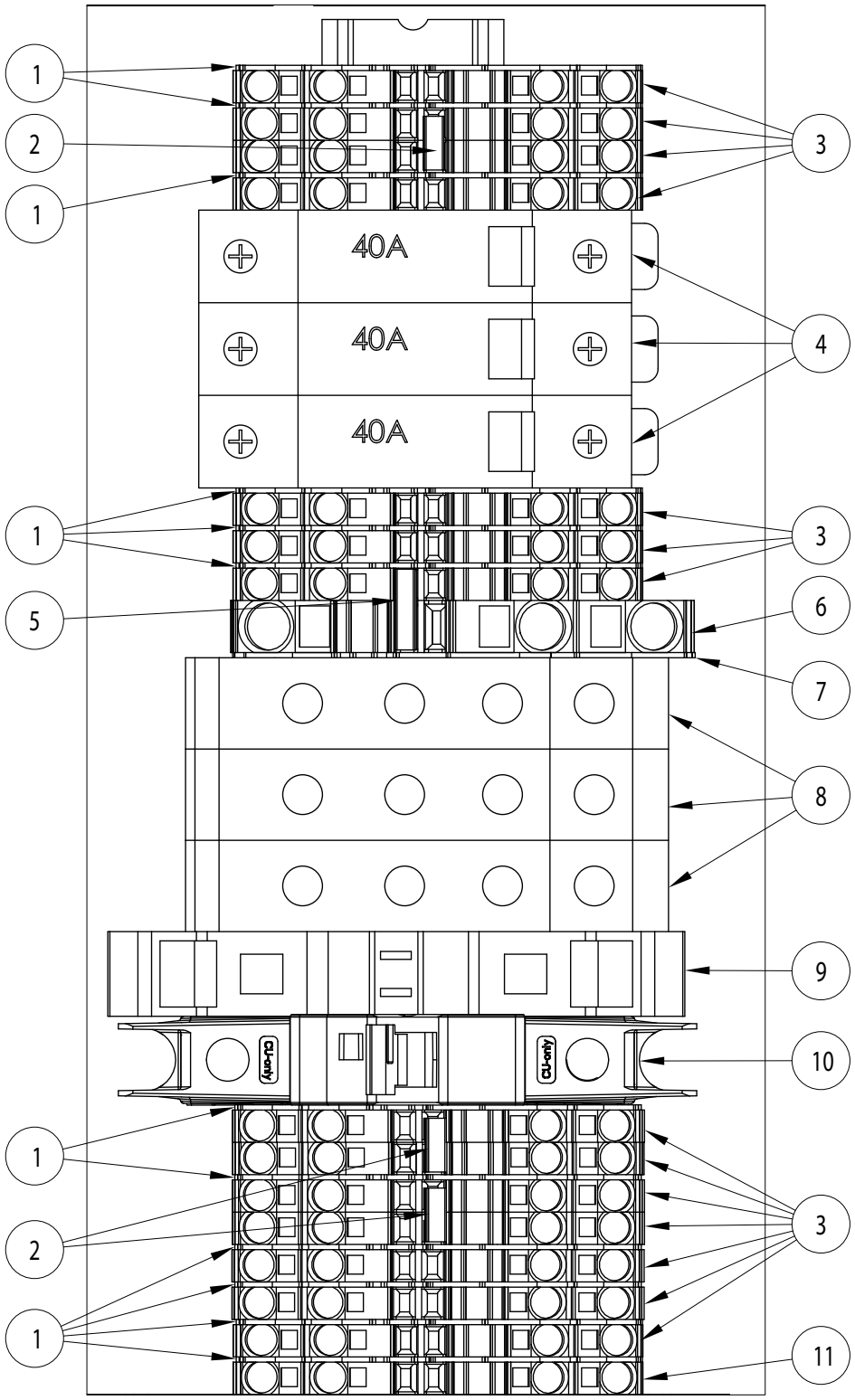

ELECTRICAL COMPARTMENT TERMINAL BLOCK ASSEMBLY
IMV-4E & IMV-3E

Item	P/N	Description
1	110484	END PLATE, SMALL
2	TB0106	JUMPER, 2 POSITION
3	110480	TERMINAL BLOCK, 4 CONDUCTOR
4	110477	BREAKER, SINGLE POLE 40A
5	110482	JUMPER, STEP DOWN
6	110479	TERMINAL BLOCK, 3 CONDUCTOR
7	110483	END PLATE, LARGE
8	R11114	DISTRIBUTION TERMINAL BLOCK
9	R11115	GROUND TERMINAL BLOCK, 2 CONDUCTOR
10	110433	BREAKER, SINGLE POLE 20A
11	110481	GROUND TERMINAL BLOCK, 4 CONDUCTOR

BLOWER MOTOR
IMV-4E & IMV-3E

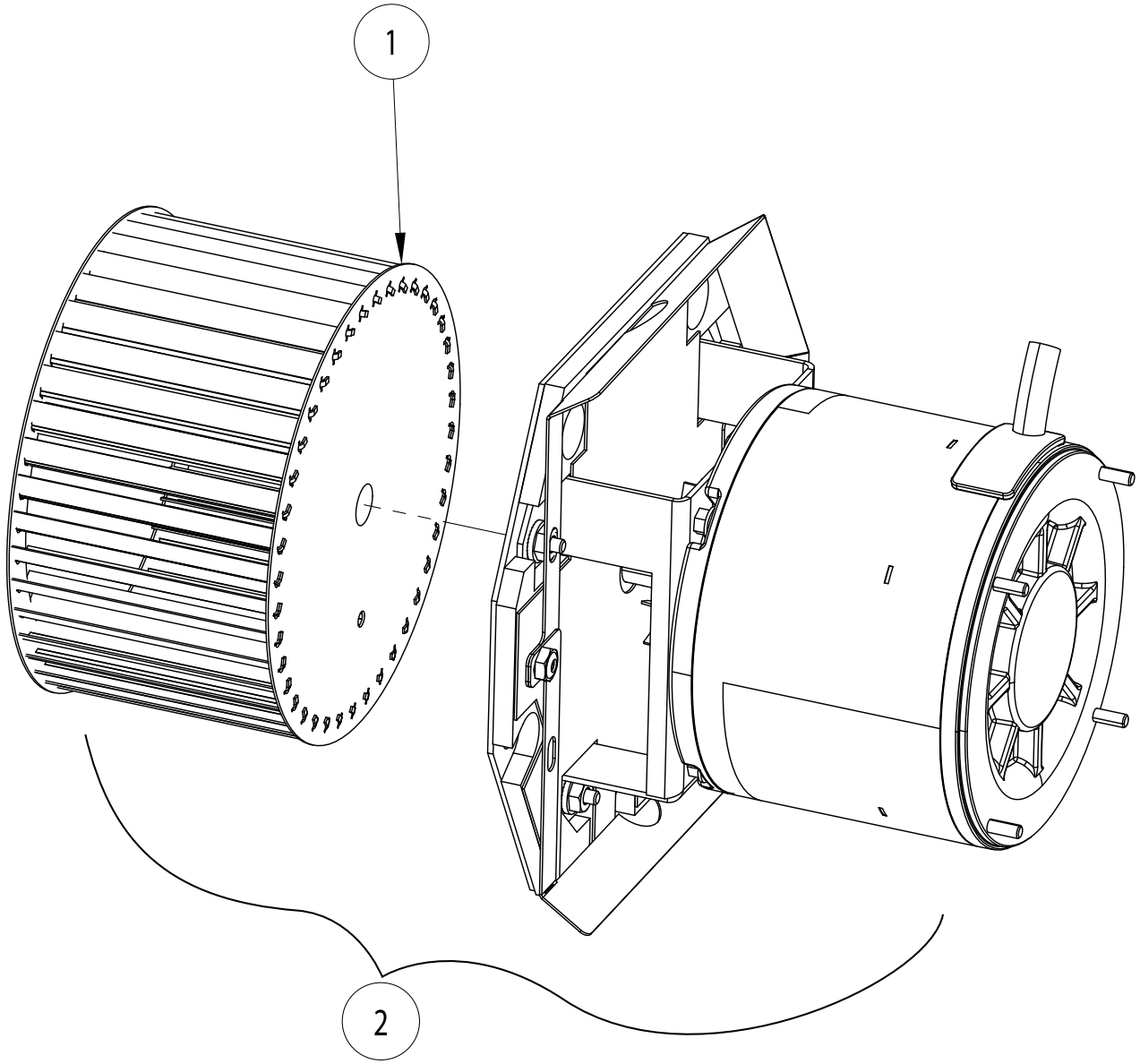

BLOWER MOTOR
IMV-4E & IMV-3E

Item	P/N	Description
1	110578	BLOWER WHEEL REPLACEMENT KIT
2	110577	REPLACEMENT KIT, BLOWER ASSEMBLY

HEATING ELEMENTS
IMV-4E & IMV-3E
(IMV-4E SHOWN)

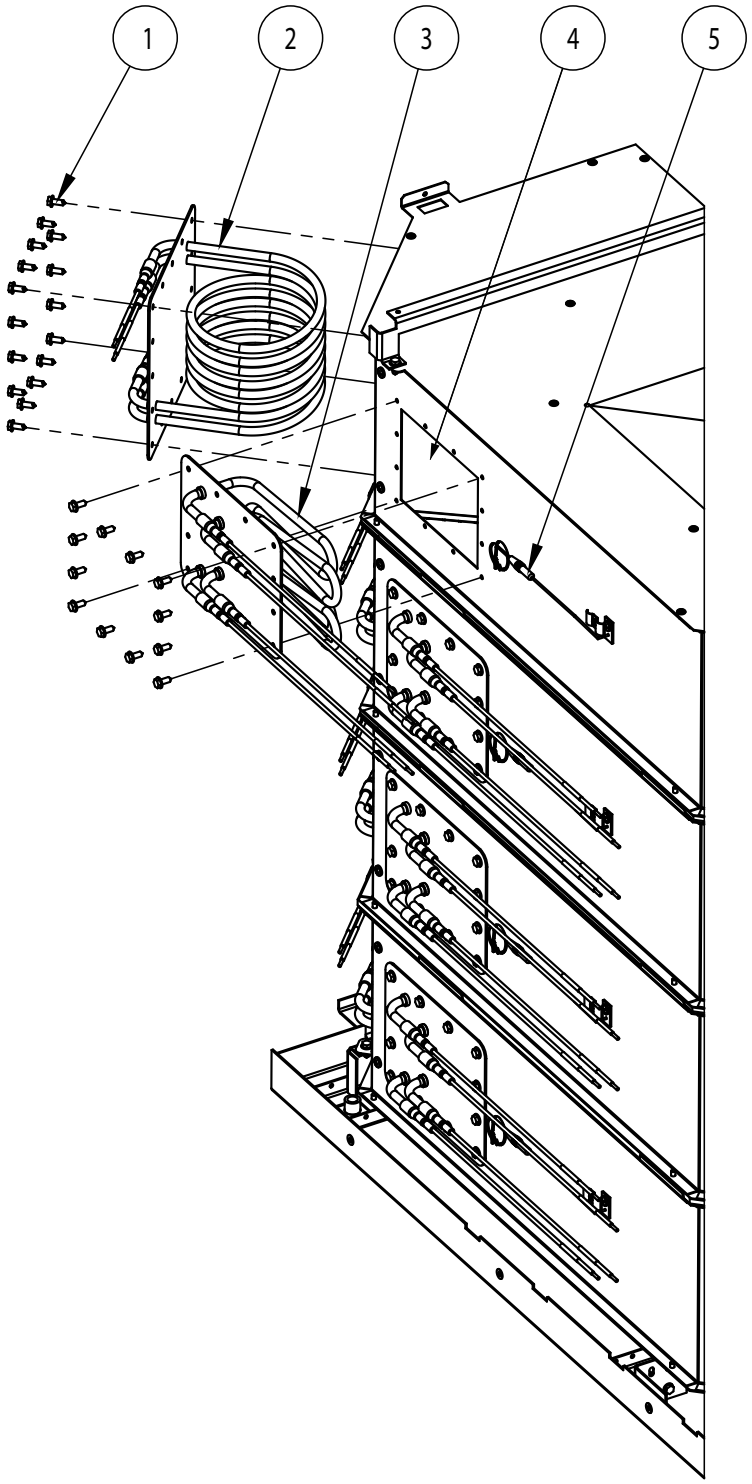

HEATING ELEMENTS
IMV-4E & IMV-3E

Item	P/N	Description
1	21876	SCREW, SELF DRILL, 10-16 X 1/2
2	110563	ELEMENT, HELICAL, MAIN
3	110564	ELEMENT, DOUBLE SWITCHBACK, SECONDARY
4	110566	CATALYST
5	110565	THERMOCOUPLE

IMV4E CE SPECIFIC PARTS

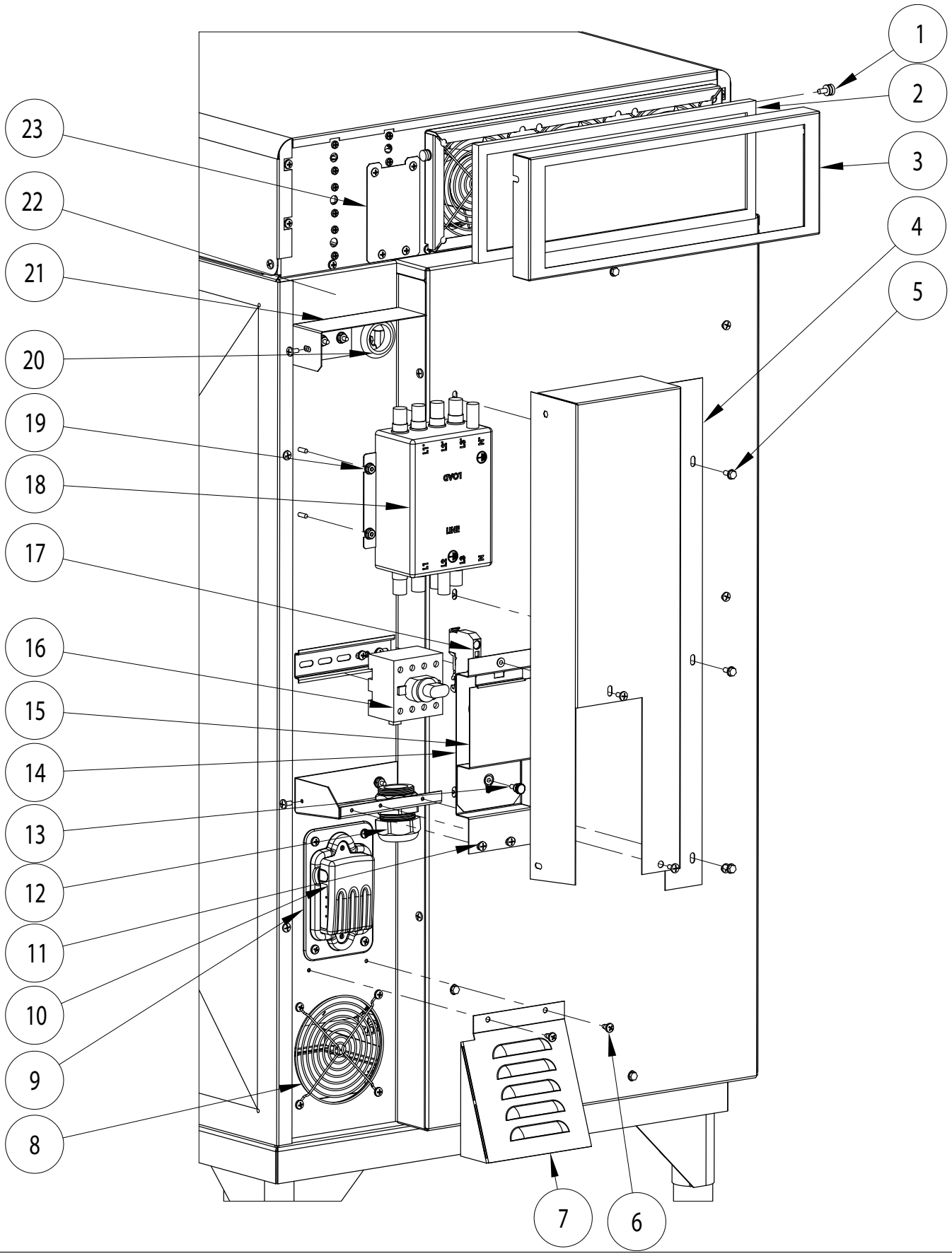

IMV4E CE SPECIFIC PARTS

Item	P/N	Description
1	SCR120	SCREW, KNRLD HEAD 10-32X.375
2	110541	FILTER, IMV
3	110538	FILTER COVER, IPX, IMV
4	110665	COVER, CE BODYBACK, IMV4E
5	21876	SCREW,SDRILL 10-16X1/2ZNPLTHEX
6	4812	SCREW,TAP 10-16X3/8 CHRPLT PAN
7	110530	COOLING AIR SPLASH GUARD, IMV
8	M0571	GUARD, 4" AXIAL FAN
9	101468	CONNECTWARE DOCK ASSEMBLY
10	101467	CONNECTWARE MODULE
11	39914	SCREW, #8-32 X 3/8 TRUSS HEAD
12	39940	CORD GRIP, 1"NPT X .071-.OO8
13	110670	THUMBSCREW, 8-32 X 3/8"
14	110667	CE SWITCH TOP SHIELD
15	110668	CE SWITCH DETACHABLE COVER
16	110661	SWITCH, 4PST 40A
17	52204	TERMINAL BLOCK, GROUND
18	110475	EMI FILTER, 50A
19	52378	FLANGE NUT, #8-32
20	72385	GROMMET, 1-3/8"
21	110663	TOP BRACKET, CE BODYBACK
22	110658	CE RH BODYBACK, IMV4E
23	110660	BLOCK-OFF PLATE, IMV CE CABLE

IMV3E CE SPECIFIC PARTS

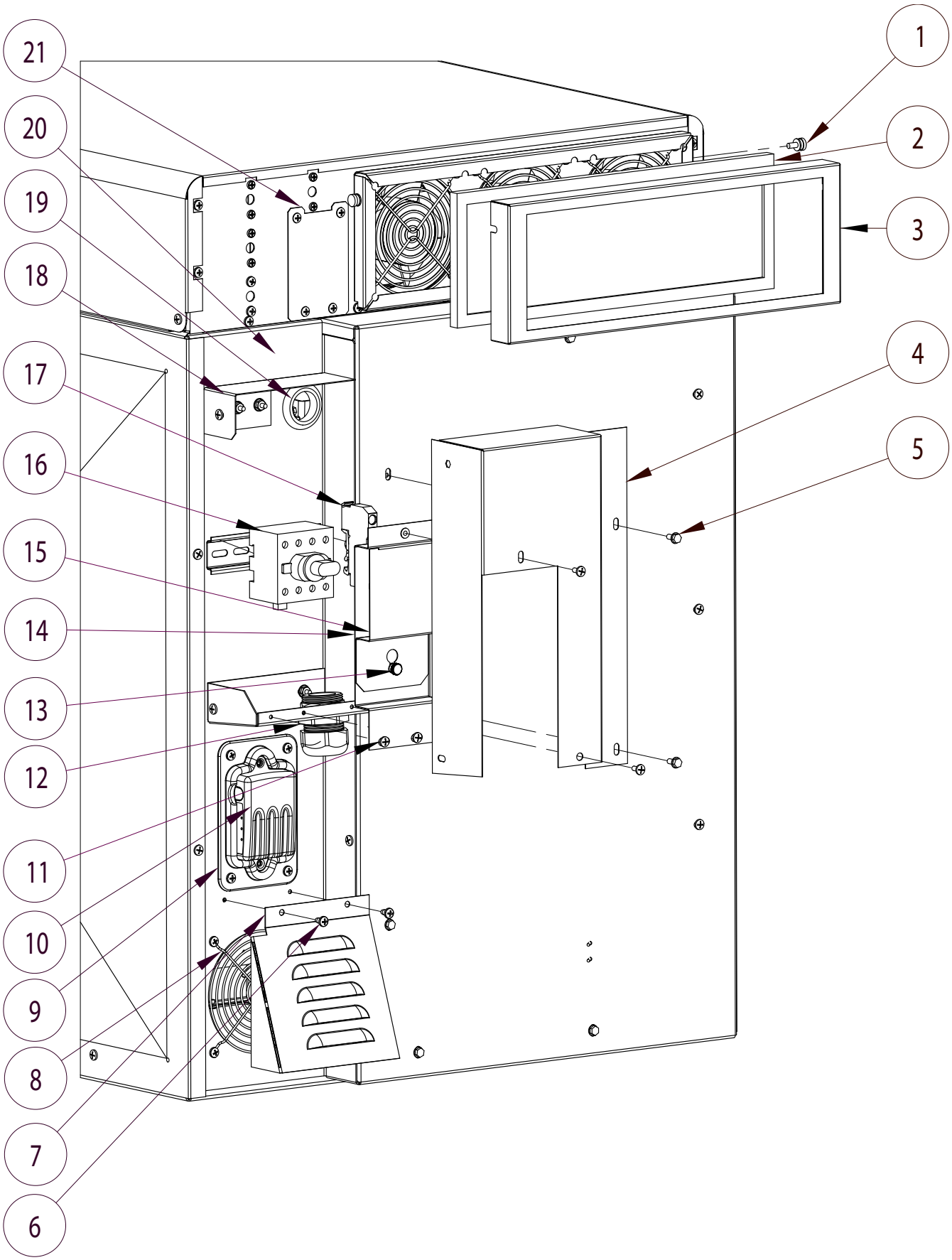

IMV3E CE SPECIFIC PARTS

Item	P/N	Description
1	SCR120	SCREW, KNRLD HEAD 10-32X.375
2	110541	FILTER, IMV
3	110538	FILTER COVER, IPX, IMV
4	110699	COVER, CE BODYBACK, IMV3E
5	21876	SCREW,SDRILL 10-16X1/2ZNPLTHEX
6	4812	SCREW,TAP 10-16X3/8 CHRPLT PAN
7	110530	COOLING AIR SPLASH GUARD, IMV
8	M0571	GUARD, 4" AXIAL FAN
9	101468	CONNECTWARE DOCK ASSEMBLY
10	101467	CONNECTWARE MODULE
11	39914	SCREW, #8-32 X 3/8 TRUSS HEAD
12	39940	CORD GRIP, 1"NPT X .071-.OO8
13	110670	THUMBSCREW, 8-32 X 3/8"
14	110667	CE SWITCH TOP SHIELD
15	110668	CE SWITCH DETACHABLE COVER
16	110661	SWITCH, 4PST 40A
17	52204	TERMINAL BLOCK, GROUND
18	72385	GROMMET, 1-3/8"
19	110663	TOP BRACKET, CE BODYBACK
20	110698	CE RH BODYBACK, IMV3E
21	110660	BLOCK-OFF PLATE, IMV CE CABLE
NS	110475	EMI FILTER, 50A*
		* NOTE: LOCATED IN CONTROL COMPARTMENT

ELECTRICAL COMPARTMENT CE TERMINAL BLOCK ASSEMBLY
IMV-4E & IMV-3E

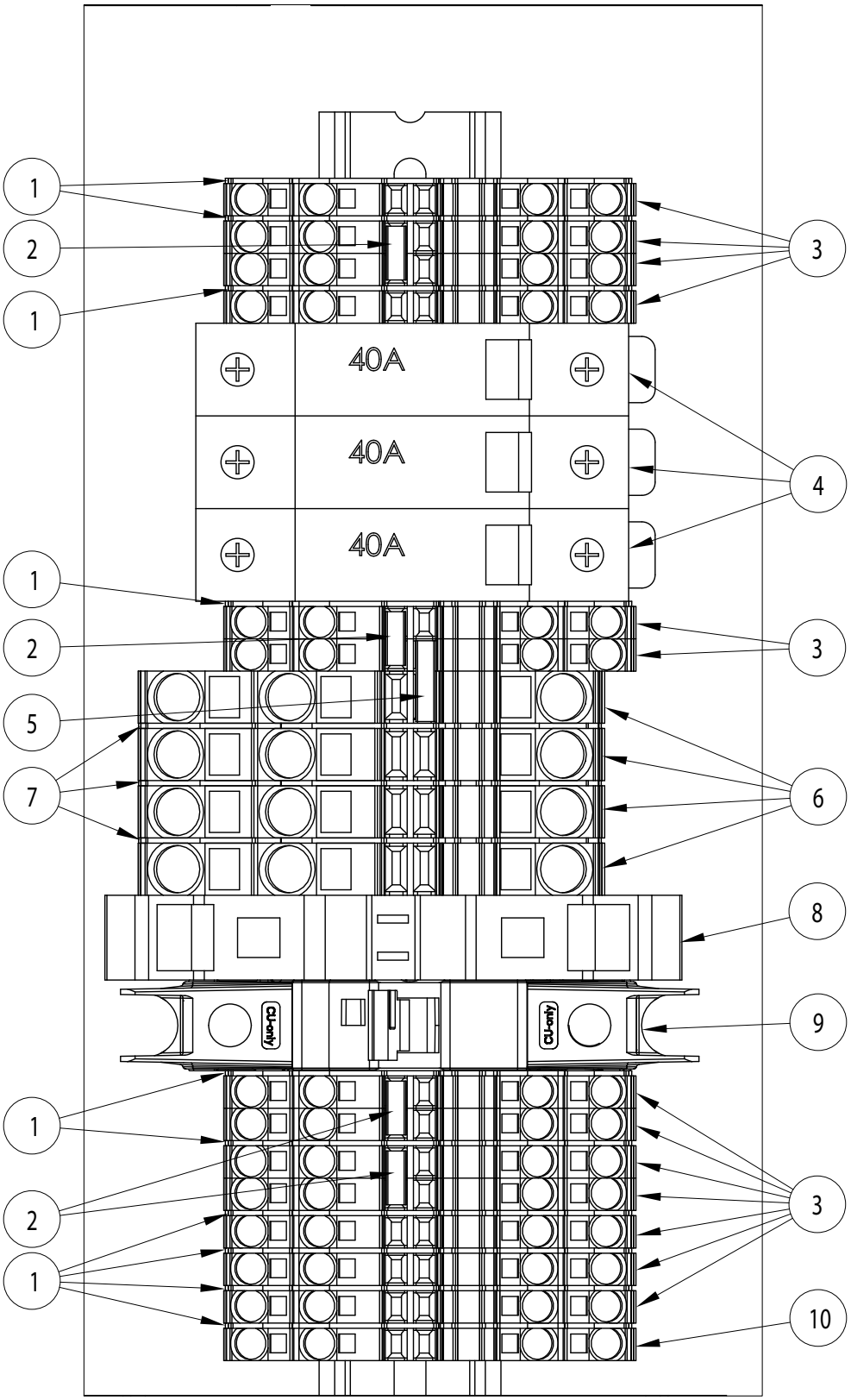

ELECTRICAL COMPARTMENT CE TERMINAL BLOCK ASSEMBLY IMV-4E & IMV-3E

Item	P/N	Description
1	110484	END PLATE, SMALL
2	TB0106	JUMPER, 2 POSITION
3	110480	TERMINAL BLOCK, 4 CONDUCTOR
4	110477	BREAKER, SINGLE POLE 40A
5	110482	JUMPER, STEP DOWN
6	110479	TERMINAL BLOCK, 3 CONDUCTOR
7	110483	END PLATE, LARGE
8	R11115	GROUND TERMINAL BLOCK, 2 CONDUCTOR
9	110433	BREAKER, SINGLE POLE 20A
10	110481	GROUND TERMINAL BLOCK, 4 CONDUCTOR

STAND

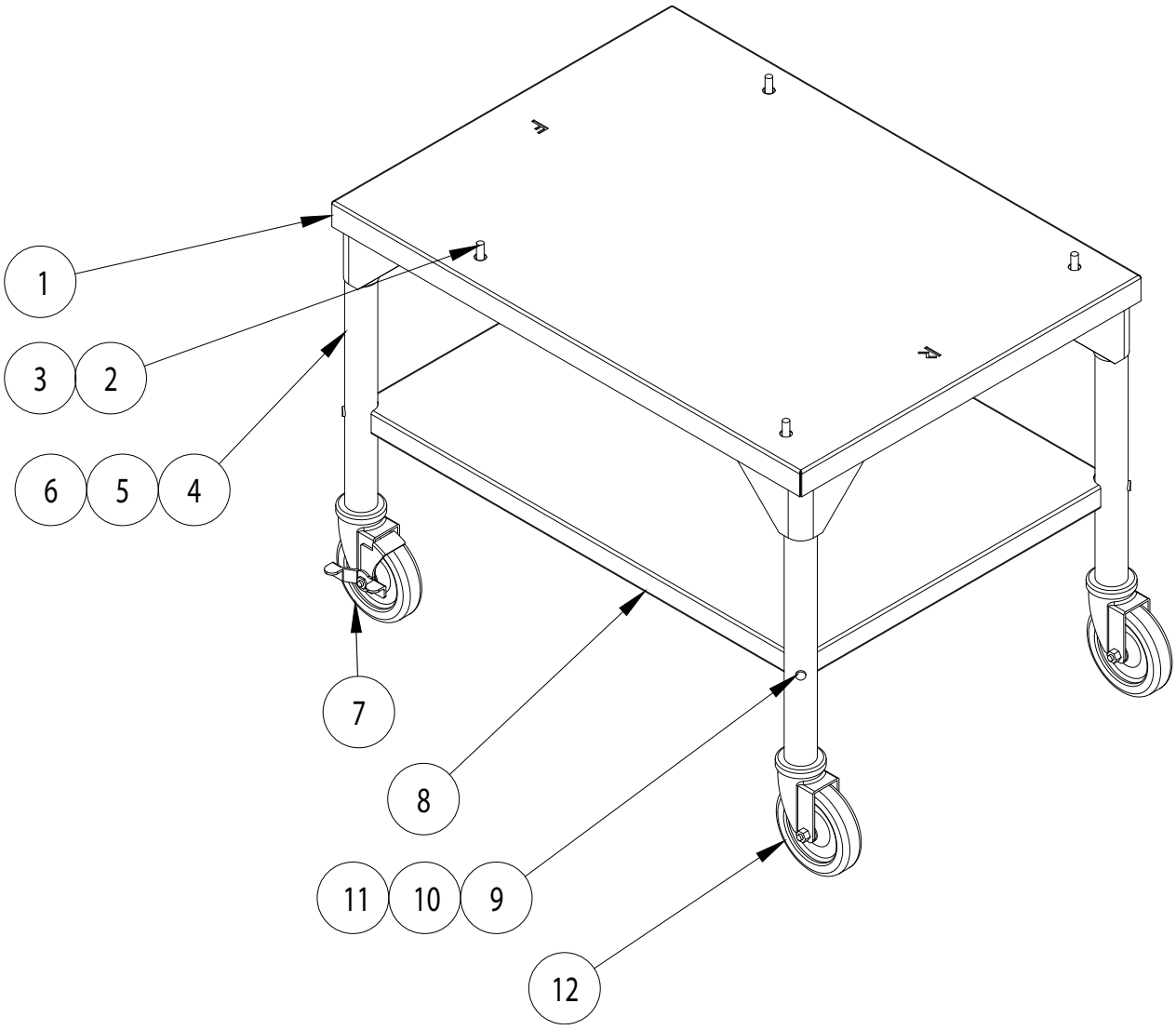

STAND

Item	P/N	Description
	110532	STAND ASSY, 24" IMV4E WITH CASTERS
1	110533	STAND INTERFACE, IMV4E
2	22498	SCREW, HHC 3/8-16 X 1
3	WSH041	WASHER, 3/8", FLAT
4	10853	LEG ASSY
5	1798	WASHER, LOCK 5/16
6	6674	NUT, HEX 5/16
7	15687	CASTER, 5" WITH BRAKE (2)
8	110534	SHELF IMV4E STAND
9	10807	BOLT, CURVED HEAD
10	1265	LOCK WASHER
11	15882	1/4 - 20 HEX NUT
12	15688	CASTER, 5" W/O BRAKE (2)
	16002	5" CASTER SET (4)

ACCESSORIES

Item	P/N	Description
	56545	MEAT PROBE, DUAL SENSOR 4"
	110383	DIAMOND GRILL PAN, 9.45 X 6.47
	110384	DIAMOND GRILL PAN, 12.9 X 8.9
	110385	DIAMOND GRILL PAN, 18 X 13
	110387	HALF PAN RISER
	110391	PADDLE PEEL
	110597	16" PIZZA DISC