MARK V & MARK V-100
ELECTRIC CONVECTION OVENS
REPLACEMENT PARTS LIST

EFFECTIVE NOVEMBER 3, 2026

Superseding All Previous Parts Lists.
The Company reserves the right to make substitution in the event that items specified are not available.
ERRORS: Descriptive and/or typographic errors are subject to correction.

BLODGETT OVEN COMPANY
42 Allen Martin Drive, Essex Junction, Vermont 05452 USA Telephone: (802) 658-6600 Fax: (802) 860-3732
www.blodgett.com

P/N 53513 Rev AM

SERIAL NUMBER LOCATION / KEY:

IMPORTANT: When ordering parts, please provide the model, voltage, phase and serial number of the oven. The identification plate is located above the right hand door under the ledge.

SERIAL NUMBER IDENTIFICATION CODE:

PA = MARK V
CT = MARK V-100

SERIAL NUMBER EXAMPLES

010114CT001T (NEW STYLE)

01/01/14 = DATE

CT = LETTER CODE FOR MARK V-100

001 = FACTORY SEQUENCE

T = TOP OVEN

TABLE OF CONTENTS

ELECTRICAL COMPONENTS 4

MECHANICAL CONTROLS 4

SOLID STATE MANUAL CONTROLS 6

FAN DELAY WITH PULSE PLUS 6

SOLID STATE DIGITAL CONTROLS 6

COOK & HOLD CONTROLS 6

INTELLITOUCH CONTROLS 10

INTELLIPLUS OR INTELLIHOLD CONTROLS 10

COMPUTER READY OVENS 10

INTELLITOUCH II 10

HUMIDAIRE CONTROLS 10

IQ2 CONTROLS 10

SOLID STATE INFINITE CONTROLS WITH DIGITAL TIMER 11

SMARTOUCH CONTROLS 12

ARTISAN CONTROL MODULE 13

ARTISAN CONTROL PANEL 14

DOOR COMPONENTS 15

BAKING COMPARTMENT COMPONENTS 15

ROLL-IN UNITS & COMPONENTS 18

ACCESSORIES 18

EXTERIOR COMPONENTS 18

IMPORTANT: When ordering parts, please provide the model, gas type and serial number of the oven. The identification plate is located on the left side of the combustion compartment and, also, above the control panel under the ledge.

☑ **ASAP Distributor Required Stocking Parts**
♦ **Doors Are Not Returnable**
* **Item Is Too Large For UPS**

ELECTRICAL COMPONENTS

Ref. No.	Part No.	Description
1	20350	Buzzer, 240V
2	18868	Selector Switch w/o Knob, Mode (3 Positions)
3	16686	Knob, Mode Selector Switch
4	6496	Blower Switch, Rocker, SPST, Blue, 1 SP (Before 1/8/85)
	17857	Blower Switch, Rocker, SPDT, Black, 2 SP (Between 1/8/85 and 3/01/94)
	30518	Blower Switch, Rocker, SPDT, Matt Black, 2 SP (After 3/01/94) (Before 11/14/07)
4	6497	Light Switch, Rocker, SPST, White (Before 3/01/94)
4	M5132	Light Switch, Rocker, SPST, Matt Black (Before 11/24/01)
	6498	Cool Down Switch, Rocker, SPDT, Red (Before 1/8/85)
	30662	Momentary Push Button, Round
5	16037	Indicator Light, 250V, Red, (Before 11/14/07)
5	18265	Indicator Light, 28V, Red (After 11/14/07)
6	16605	Fuse, 600V,10 Amp (Before 6/88 & After 02/15/97)
7	16604	Fuse Holder (Before 6/88) Intelli II
6	20162	Fuse, 300V, 10 Amp. (Between 6/88 & 02/15/97)
7	20163	Fuse Holder (Between 6/88 & 02/15/97)
7	20442	Fuse Holder, 30AMP, Class CC (After 02/15/97)
8	32244	Motor, 208-240V, 1 SP
8	32244	Motor, 208-240V, 2 SP
	34470	Harness, Motor, Centrifugal Switch 2 SP After 11/01/99 amd Before 11/14/07
	34690	Harness, Motor, 1 or 2 Speed, After 11/14/07
9	5001	Wheel Assy., Blower
	19667	Mount & Panel Assy., Motor
10	35702	Microswitch & Bracket Assy., Door Replaces 19978, Units after 06/84
	35419	Bracket, Microswitch Units after 06/84
10	35918	Microswitch Assy., Door Replaces 19978 Units before 06/84
	6195	Bracket, Microswitch Units before 06/84
	90047	Socket, Quick Disconnect, Before 11/14/07
	20662	Plug, Quick Disconnect, Before 11/14/07
	4888	Lug, Grounding
11	33245	Element Assy., 208V
11	20320	Element Assy., 220V
11	33244	Element Assy., 240V

ELECTRICAL COMPONENTS

Ref. No.	Part No.	Description
11	20322	Element Assy., 440V
11	20319	Element Assy., 480V
	20604	Cover for terminal, ends on back
	20605	Harness, Element 208V-480V
	36429	Circuit Breaker, After 11/14/07
	36755	Switch, Thermal Axial Fan
23	56760	Manual Reset Compartment Switch
4	30517	Light Switch, Rocker DPST, Black, After 4/24/01
4	20530	Blower Switch, Rocker 3PDT, Black, After 11/14/07
	36700	Transformer, 240 to 24V, After 11/14/07
	17754	Transformer, High Volt, 480V to 240V
	17252	Bracket, Transformer
	19453	Voltage Conversion Kit, 208V-480V
12	17556	Terminal Block, 90 Amp., 3 Pole (Before 10/1/25)
	5184	Wire Assy (between terminal block and contactor)
13	21430	Axial Fan, 230V All Units before 09/01/99
	NOTE:	***For units before 09/01/99 there is only (1) fan. After 09/01/99 and before 11/14/07, there are (2) of these fans.***
	23034	Fan, Axial, 4", After 11/14/07
18	38559	Mechanical Contactor Conversion Kit, 3 Phase
	R11087	Mechanical Contactor, 3 Pole, 40 AMP, 240V
	39443	Mechanical Contactor, 65 AMP Conversion Kit, 1 Phase
	53235	Mechanical Contactor, 65 AMP, 3 Pole w/aux contact
20	33904	MOV Assy
	58325	Aux. Contact Block, 1 Phase, Contactor (CC series contactor)
24	102251	Terminal Block, 85A, 3 Pole (After 09/30/25)

MECHANICAL CONTROLS

STANDARD ON OVENS MANUFACTURED BEFORE 9/1/86

Ref. No.	Part No.	Description
	15956	Timer, 60 Minute w/o Knob (Cook Only)
	16030	Knob, Timer
	16536	Thermostat, Cook KX-234-36 w/o Knob (140º - 500º)
3	16686	Knob, Thermostat
	90588	Contactor, 50 Amp. Mechanical



1
20350
Buzzer

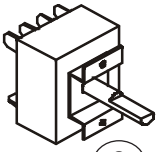

2
18868, 21068
Selector Switch



3
16686
Knob

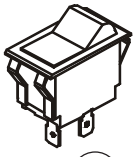

4
Rocker Switch

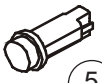

5
16037
Indicator
Light

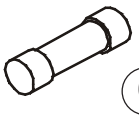

6
20162
16605
Fuse

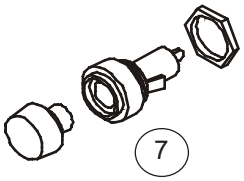

7
20163, 16604,
20442
Fuse Holder

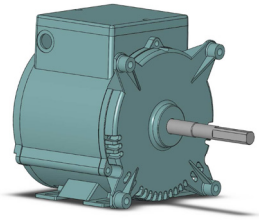

8
32244
Motor

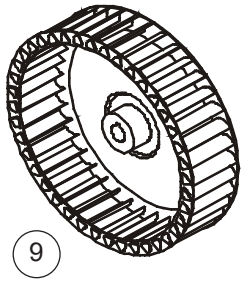

9
5001
Blower Wheel

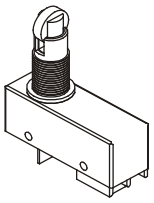

10
35702
35918
Microswitch

11
33245
20320
33244
20322
20319
Element

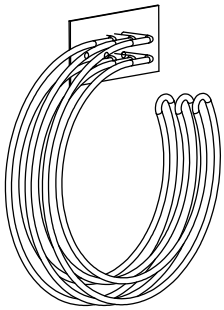

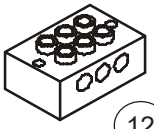

12 24
17556 102251
Terminal
Block

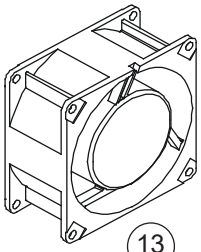

13
21430
Axial Fan

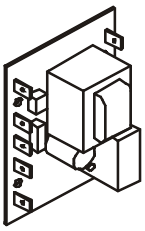

14
18578
Temp.
Controller

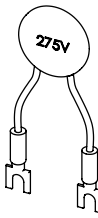

20
33904
MOV Assy

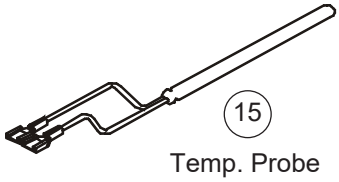

15
Temp. Probe

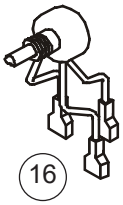

16
18234
Potentiometer

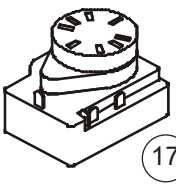

17
18226
Timer

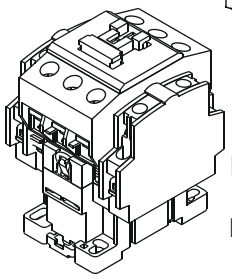

18
R11087, 3 Pole, 40A
or
R11112, 3 Pole, 65A
Contactor

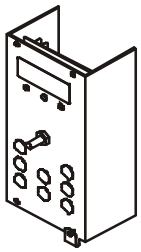

19
Digital
Temp.
Controller

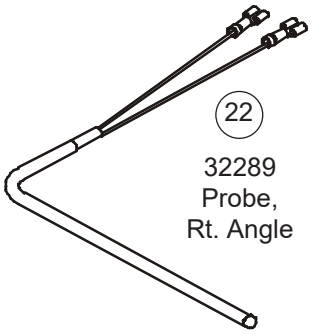

22
32289
Probe,
Rt. Angle

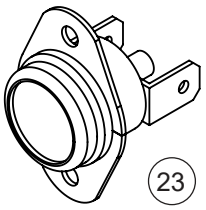

23
56760
Manual Reset
Compartment Switch

SOLID STATE MANUAL CONTROLS

STANDARD ON OVENS MANUFACTURED AFTER 7/86

Ref. No.	Part No.	Description
3	16686	Knob, 8 Position Temperature Switch
3	16686	Knob, 60 Minute Timer
14	18578	Control Board (Before 11/14/07)
	33152	Temperature Control (After 11/14/07 and before 9/10/13)
	57372	Temperature Control (After 9/9/13)
15	18588	Probe, Temperature, 100K Thermistor (Before 9/10/13)
	57562	Probe Temperature, 1K RTD, (After 9/10/13)
16	18234	Potentiometer, Remote (Infinite Control) (Before 11/14/07)
	100222	8 Position Temperature Switch
	100223	8 Position Temperature Switch, Cracker Barrel
17	18226	Timer, 60 Minute 240V
	19428	Timer, 6 Hour, 240V
	18352	Harness, Wiring (8 Set Point or Infinite, (1 SP) (Before 11/14/07)
	18351	Harness, Wiring (8 Set Point or Infinite, (2 SP) (Before 11/14/07)
	18283	Control Panel, Infinite, 1 SP (Before 11/14/07)
	18446	Module Assy, Complete, 1 SPD, (Before 11-14-07)
	18281	Control Panel, Infinite, 2 SP (Before 11/14/07)
	18448	Module Assy, Complete, 2 SPD, (Before 11-14-07)
	57378	Panel & Decal, 2 SP, (After 11/14/07 and before 9/10/13)
	57379	Panel & Decal, 1 SP, (After 11/14/07 and before 9/10/13)
	57381	Panel & Decal, 2 SP, (After 9/9/13)
	57382	Panel & Decal, 1 SP, (After 9/9/13)
	57376	Module Assy., 2 SP, 60 Hz
	50557	Harness, Front, (After 11/14/07)

FAN DELAY WITH PULSE PLUS

Ref. No.	Part No.	Description
	18291	Timer, Fan Delay, 10 Minute, 240V
	18293	Timer, Fan On, 30 Minute, 240V
	18583	Timer, Solid State, Pulsing, 30 Second, 240V
	16539	Indicator Light, 250V, Amber, Round
	18582	Relay, 3PDT, 240V w/ Bracket
	18355	Harness, control wiring 8 Set Point or Infinite, 2 SP
	18277	Control Panel & Decal, Porcelain, 8 Set Pt.
	16686	Knob

SOLID STATE DIGITAL CONTROLS

5 KEY

Ref. No.	Part No.	Description
2	18868	Selector Switch w/ Knob, Mode (3 Positions) 1 SP
	21068	Selector Switch w/ Knob, Mode (4 Positions) 2 SP, (Before 11/14/07)
3	16686	Knob, Mode Selector Switch
	30662	Light Switch, Momentary, Round
	23086	Suppressor Assy., RC
	24924	Harness, Wiring (1 SP)
	24920	Harness, Wiring (2 SP), (Before 11/14/07)
	30666	Control Panel & Decal, 1 SP (Decals for fuseholders)
	30667	Control Panel & Decal, 2 SP (Decals for fuseholders)
	56729	Control Panel & Decal Assy (After 11/14/07 and Before 10/13/15)
	50557	Harness, Front, (After 11/14/07)
	58719	Control Panel & Decal (After 10/12/15)
15	18588	Probe, Temperature, 100K Thermistor (Before 10/13/15)
	57562	Probe Temperature, 1K RTD, (After 10/12/15)
	24684	Knob, Mode (For 30658)
	24685	Knob, Adjust
19	30658	Controller, Solid State Digital Thermistor (Before 10/13/15)
	58718	Controller, Solid State Digital RTD (After 10/12/15)

COOK & HOLD CONTROLS

Ref. No.	Part No.	Description
2	18868	Selector Switch w/o Knob, Mode (3 Positions) (Before 1/18/85)
	20347	Selector Switch w/o Knob, Mode (4 Positions) (After 1/18/85)
3	16686	Knob, Mode Selector Switch
	16539	Indicator Light, 250V, Amber, Round Hold Only
	17984	Timer, 12 Hour w/ Knob
	17863	Timer, 12 Hour w/o Knob
3	16686	Knob, Timer
	15365	Thermostat, Hold K-877-36 w/o Knob (120º - 200º)
	16392	Knob, Thermostat
	20351	Controller, Temperature Hold (150º - 250º)
3	16686	Knob, Temperature Hold Controller
15	18588	Probe, Temperature
	18234	Potentiometer

EXCLUSIVE TO KFC FAST CONTROLS
STANDARD ON OVENS MANUFACTURED AFTER 11/08/96

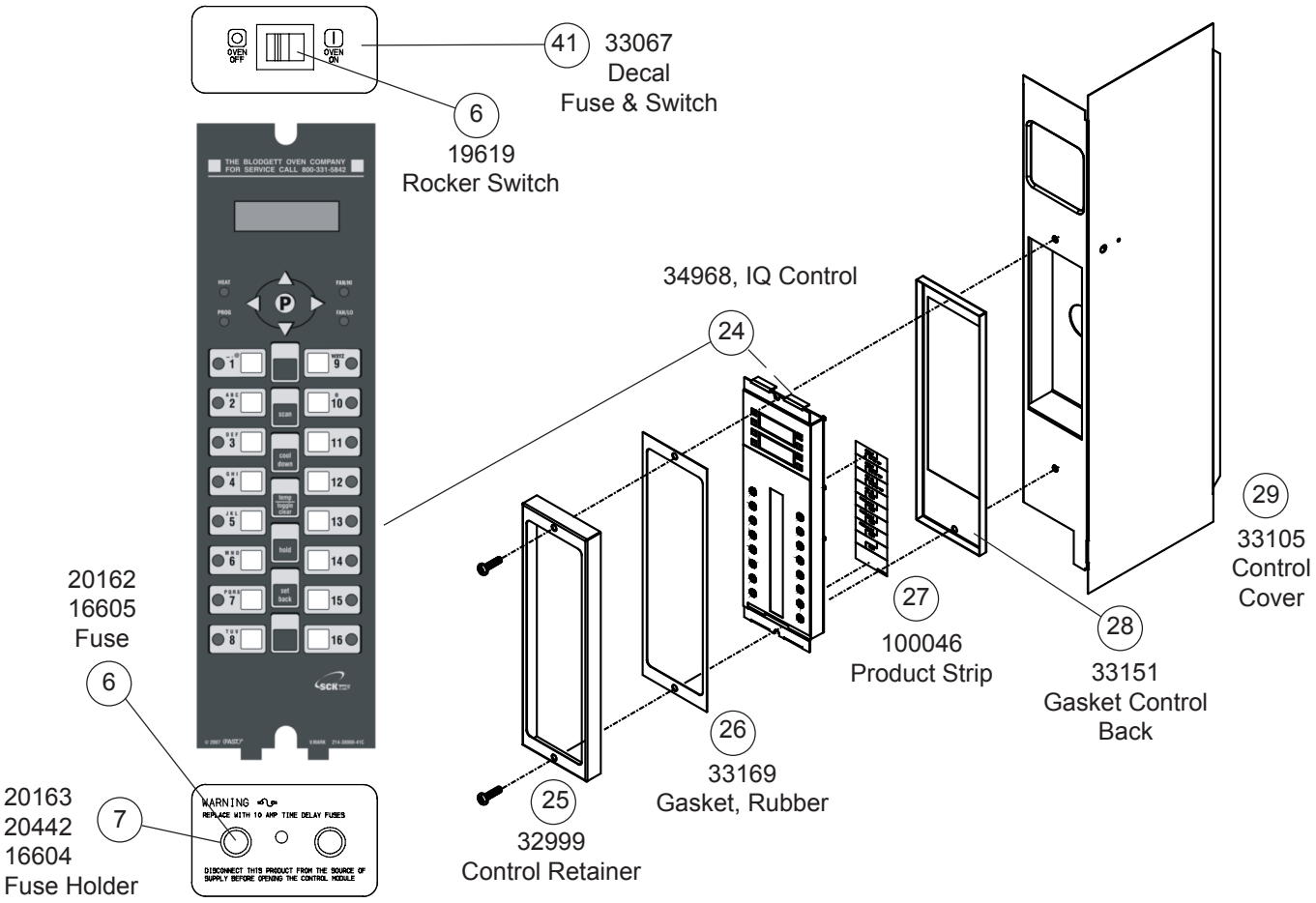

EXCLUSIVE TO KFC FAST CONTROLS
STANDARD ON OVENS MANUFACTURED AFTER 11/08/96

Ref. No.	Part No.	Description
24	34968	Control, "IQ" w/SCK for U.S.
24	101199	Control, "IQ" w/OLP
34	33902	Relay, 4PDT, 3 AMP, 250V
	33922	Socket, Relay
	33073	Relay Board
35	33074	Probe, Right Angle
	52948	Transformer 208/240-24V
	33075	Control Harness 208/240V
	33072	Control Harness 24V
	33296	Harness Adaptor
11	33244	Element Assy. 240V
11	33245	Element Assy. 208V
	39443	Mechanical Contactor, 65 AMP Conversion Kit, 1 phase
18	37295	Contactor 3 Pole,30 AMP,208/240V, 3PH
	33904	MOV Assy
6	19619	Switch, Rocker DPST, Black(Power Switch)
38	50274	Diverter, Grease LH
39	50275	Diverter, Grease RH
40	33139	Drip Shield
	32519	Stainless Steel Oven Cap
41	33067	Decal, Fuse & Switch
27	34041	U.S. Product Strip, (Before 4/17/07)
	100046	U.S. Product Strip, (After 4/17/07)
	37635	Shelf Assy w/Legs

Ref. No.	Part No.	Description
7	20163	Fuse Holder (Between 6/88 & 02/15/97)
7	20442	Fuse Holder, 30AMP, (After 02/15/97)
7	16604	Fuse Holder (Before 6/88) Intelli II
6	16605	Fuse, 600V,10 Amp (Before 6/88 & After 02/15/97)
6	20162	Fuse, 300V, 10 Amp. (Between 6/88 & 02/15/97)
	33155	Front Comm. Port
	33156	Rear Comm. Port
29	33105	Control Cover
25	32999	Control Retainer
26	33169	Gasket, Rubber
28	33151	Gasket, Control Back
36	33253	Flue Guard
30	33108	Shelf Assy w/Channels
31	33117	Channel Assy, Support (used with Shelf)
37	33083	Four Position Rack Guide
	33150	Baffle Bracket
	33090	Baffle, Interior
	33528	Caster Kit, adjustable (Set of 4)
	33193	Legs, 25" S/S
	34028	Stacking Kit, CTB on Mark V (Exclusive to KFC)
	34126	Start-Up & Nightly Cleaning Sticker
	101161	Bracket, Remote Connection*
	101163	WIFI Module*
	101164	Cable, Control to Rear*
	101165	Cable, Rear to WIFI Module*

* Applicable to OLP Ovens Manufactured After May 1, 2022

EXCLUSIVE TO KFC FAST CONTROLS

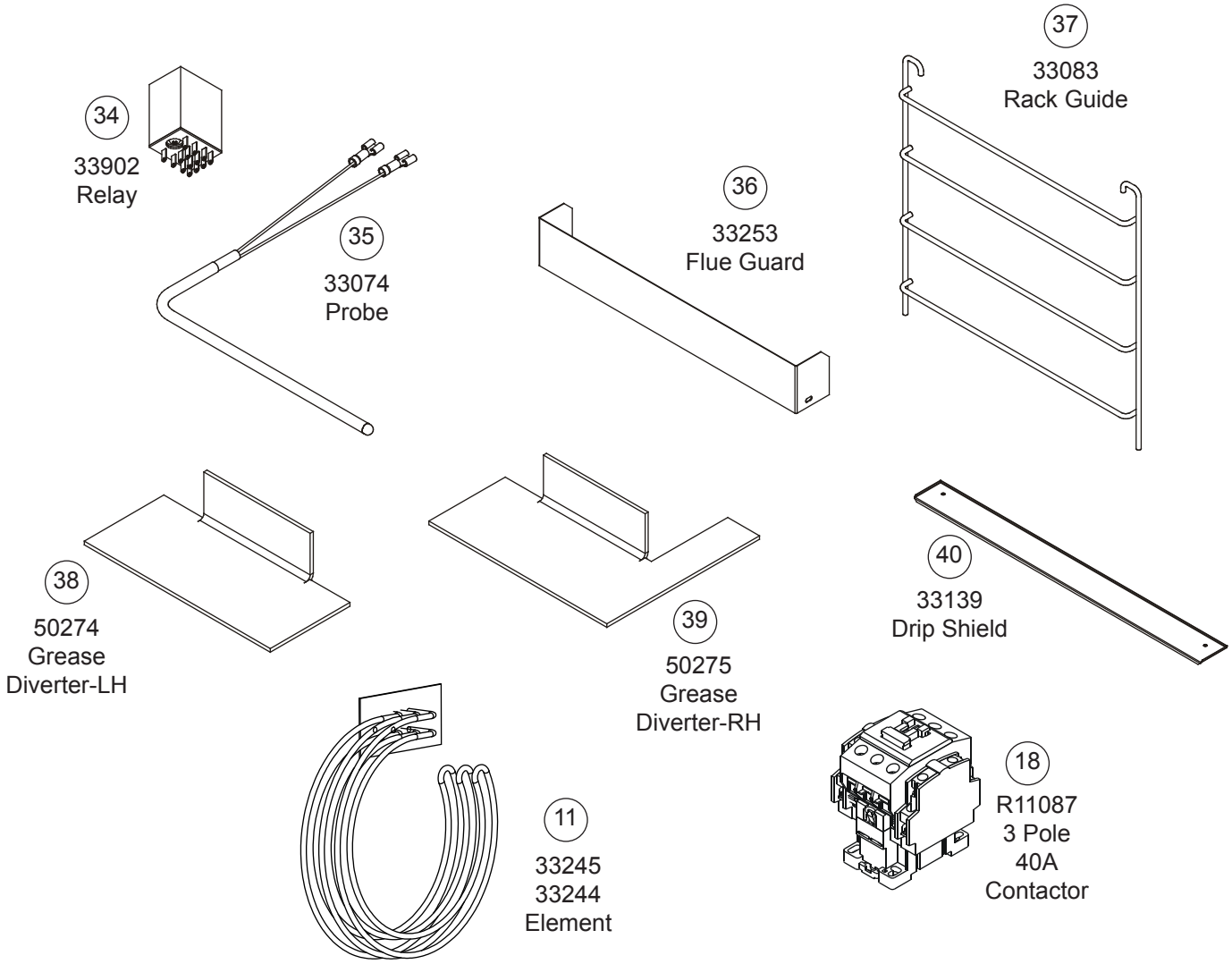

COMPLETE SHELF ASSY / PART #37635 (INCLUDES LEGS AND CASTERS)

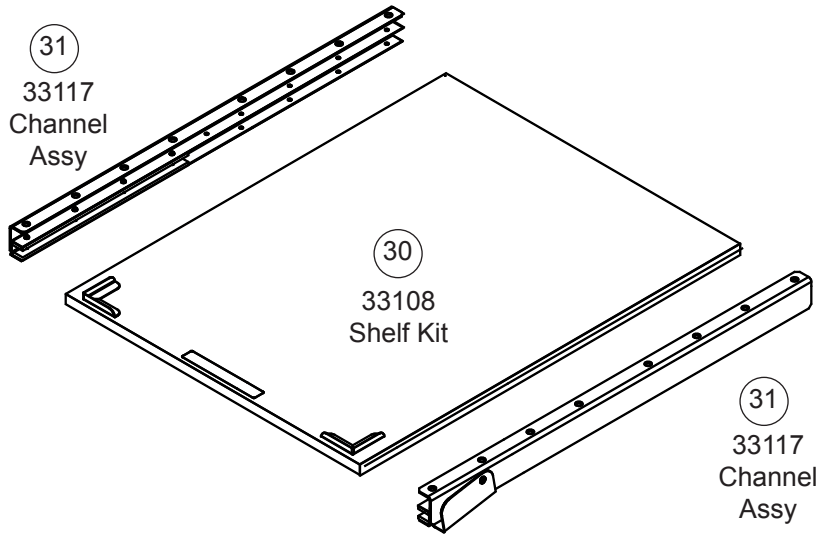

INTELLITOUCH CONTROLS
17 KEY

Ref. No.	Part No.	Description
	20360	Probe, Temperature Integrated
	20112	Filter, RFI (Used w/ Integrated Controller)
	20356	Transformer, 115/230V to 24V
	18582	Relay w/ Bracket, 3PDT, 240V (For 2 SP)

INTELLIPLUS OR INTELLIHOLD CONTROLS
12 KEY & 13 KEY

(REQUIRES 2 SPEED MOTOR, CAPACITOR & BLOWER SWITCH)

Ref. No.	Part No.	Description
	23392	Probe, Temperature RTD
	24181	Knob, Control (2 Per Oven)
	19620	Blower Switch, Rocker, DPST, Black
	23086	Suppressor Assy., RC
	36742	IQ2 Retrofit Kit Control

COMPUTER READY OVENS

Ref. No.	Part No.	Description
	16645	Probe, Temperature (2 Wires, 12" Long) for 8 Set Point or Infinite Boards
	17925	Extension, Cable (For Single Oven)

INTELLITOUCH II
33 KEY

Ref. No.	Part No.	Description
22	32289	Probe, Temperature RTD
	5279	Thermostat, Back-Up KX-38-36
	19619	Switch, Rocker, DPDT, Black
	19620	Switch, Rocker, Momentary
	21675	Relay, SPDT, 240V
	23086	Suppressor Assy., RC
	20442	Fuseholder
	16605	Fuse

HUMIDAIRE CONTROLS

Ref. No.	Part No.	Description
	18439	Potentiometer, Steam Duration
	18580	Switch, Momentary
	18314	Switch, Thermal
	18267	Indicator Light, 250V, Blue, Round
	18301	Solenoid Valve, Water, 240V
	18409	Pressure Regulator, Water
	18310	Nozzle Assy., Spray
	18366	Harness, Wiring ("Humidaire") (See Note)

NOTE: ***Ovens with "Humidaire" feature require two harnesses, one for the module (18351) & one for the "Humidaire" controls (18366).***

18282 Control Panel & Decal, Infinite, 2 SP

IQ2 CONTROLS

Ref. No.	Part No.	Description
	36403	Decal Only, IQ2 Control, (Before 7-20-2007)
	33074	Probe, Temperature
	19619	Switch, Rocker
	52948	Transformer
	33902	Relay, 4PDT
	33073	Relay, Boardx

SOLID STATE INFINITE CONTROLS WITH DIGITAL TIMER

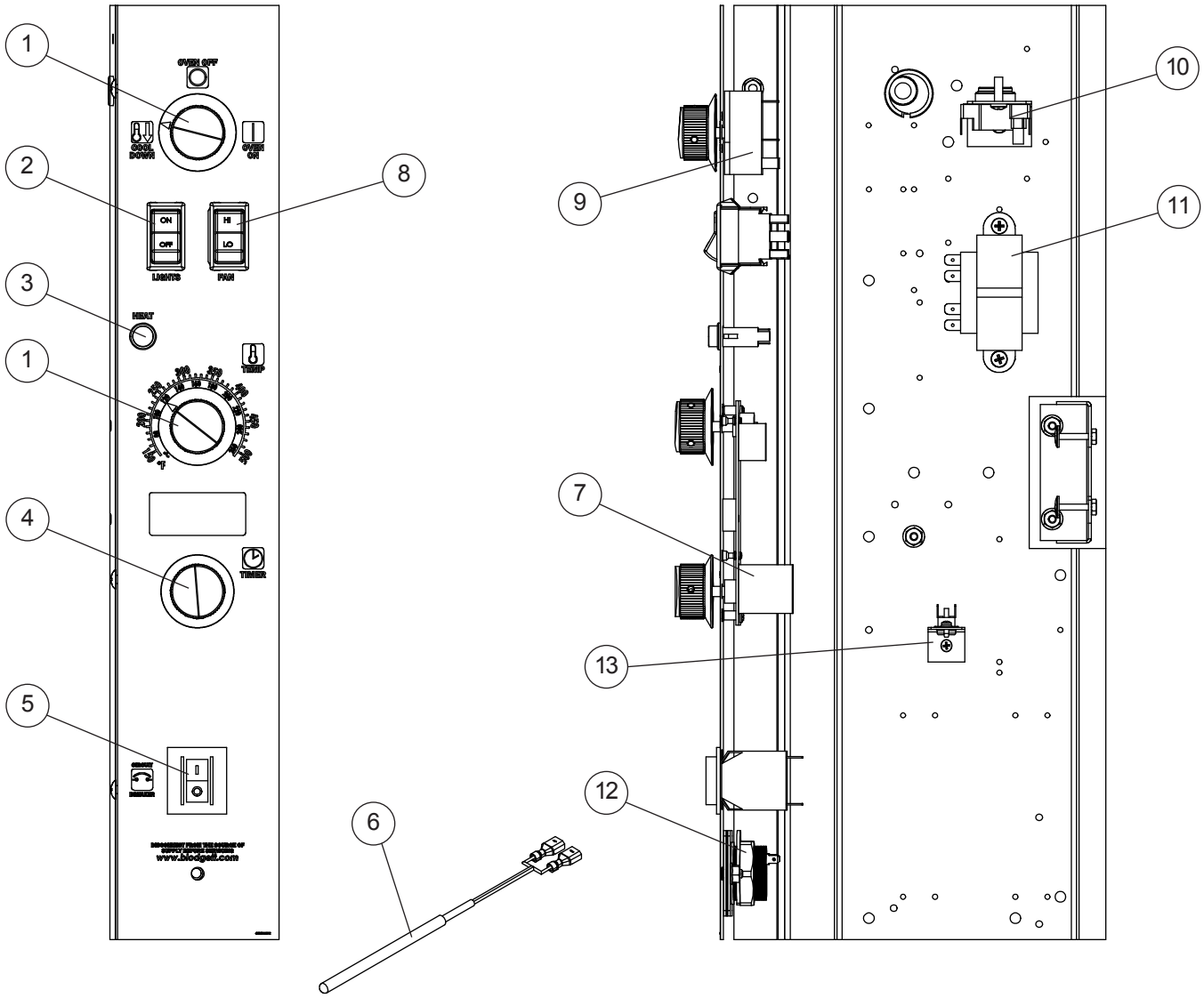

Ref. No.	Part No.	Description
1	36616	Knob w/Arrow
2	6497	Light Switch, SPST, White
3	18265	Indicator Light, 28V
4	36617	Knob, w/o Arrow
5	36429	Circuit Breaker
6	18588	Probe, 100K Ohm, 1/4" terminals, before 9/25/13
	57562	Probe, 1K Ohm, 3/16" terminals, after 9/24/13
	57563	Module Assy. w/probe
	57566	Panel & Decal, infinite w/digital timer

Ref. No.	Part No.	Description
7	56282	Temperature Control w/Digital Timer before 9/25/13
7	57561	Temperature Control w/Digital Timer after 9/25/13
8	20530	Blower Switch, 3PDT, Black after 9/24/13
9	18868	Mode Switch w/o Knob, 3 Positions
10	36755	Thermal Switch
11	36700	Transformer, 120/240 to 24V
12	52668	Beeper

SMARTOUCH CONTROLS

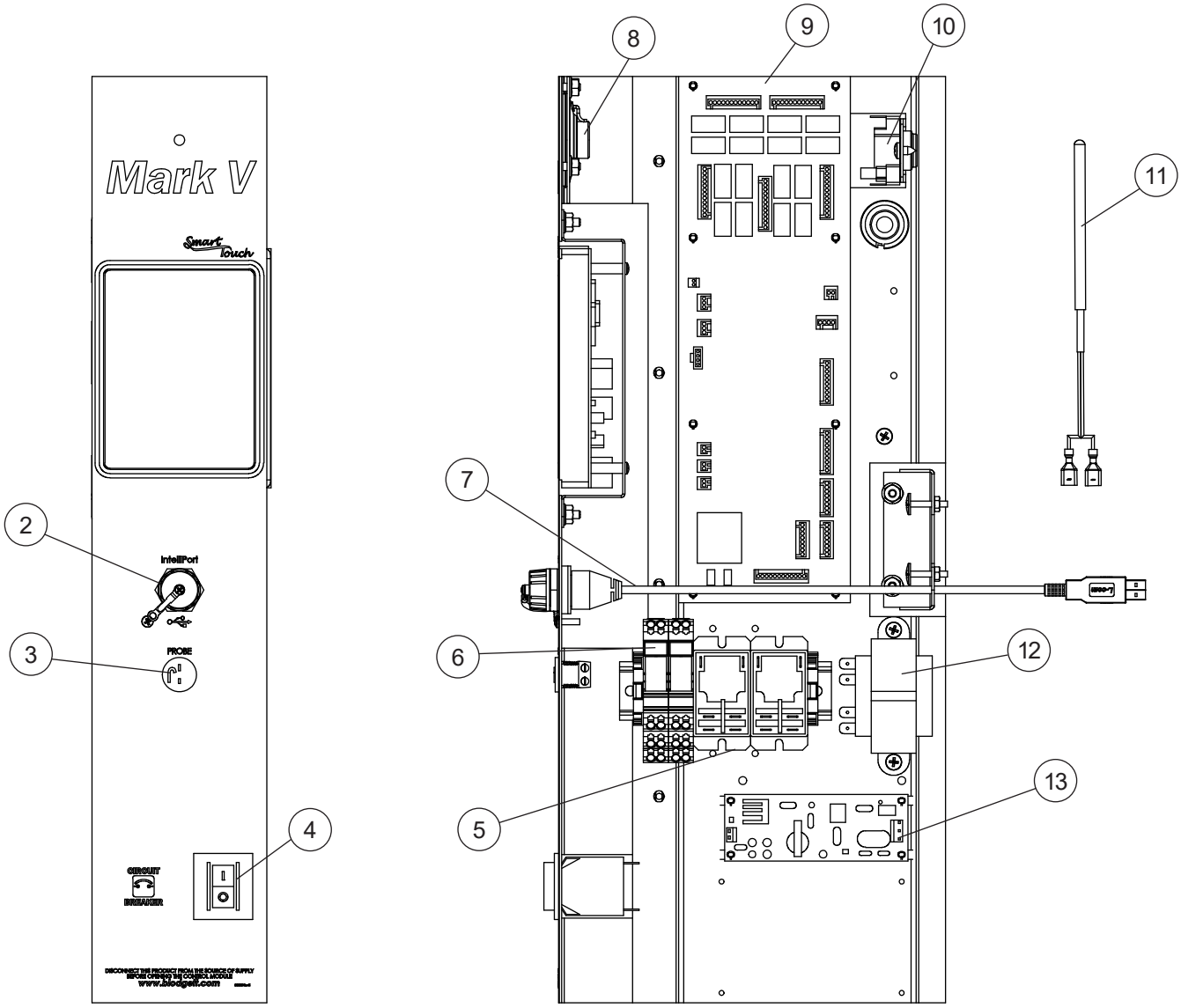

Ref. No.	Part No.	Description
2	52161	USB Cover
3	39781	Meat Probe Jack
	39782	Meat Probe Jack Plug
	56545	Meat Probe, 4", Dual Sensor
4	39688	Circuit Breaker 20A
5	55599	Relay, DPST, 24VDC
6	38604	Relay, DPDT, 24VDC
	39343	Jumper

Ref. No.	Part No.	Description
7	52647	USB Cable
8	59777	Speaker Kit, w/Retainers
9	53206	I/O Board, before 11/8/13
	57727	I/O Board, after 11/8/13
10	36755	Thermal Switch
11	34473	Probe, RTD, 1K
12	36700	Transformer, 120/240 to 24V
13	54604	DC Power Supply, 24V, 15W
	54330	Communication Cable

ARTISAN CONTROL MODULE

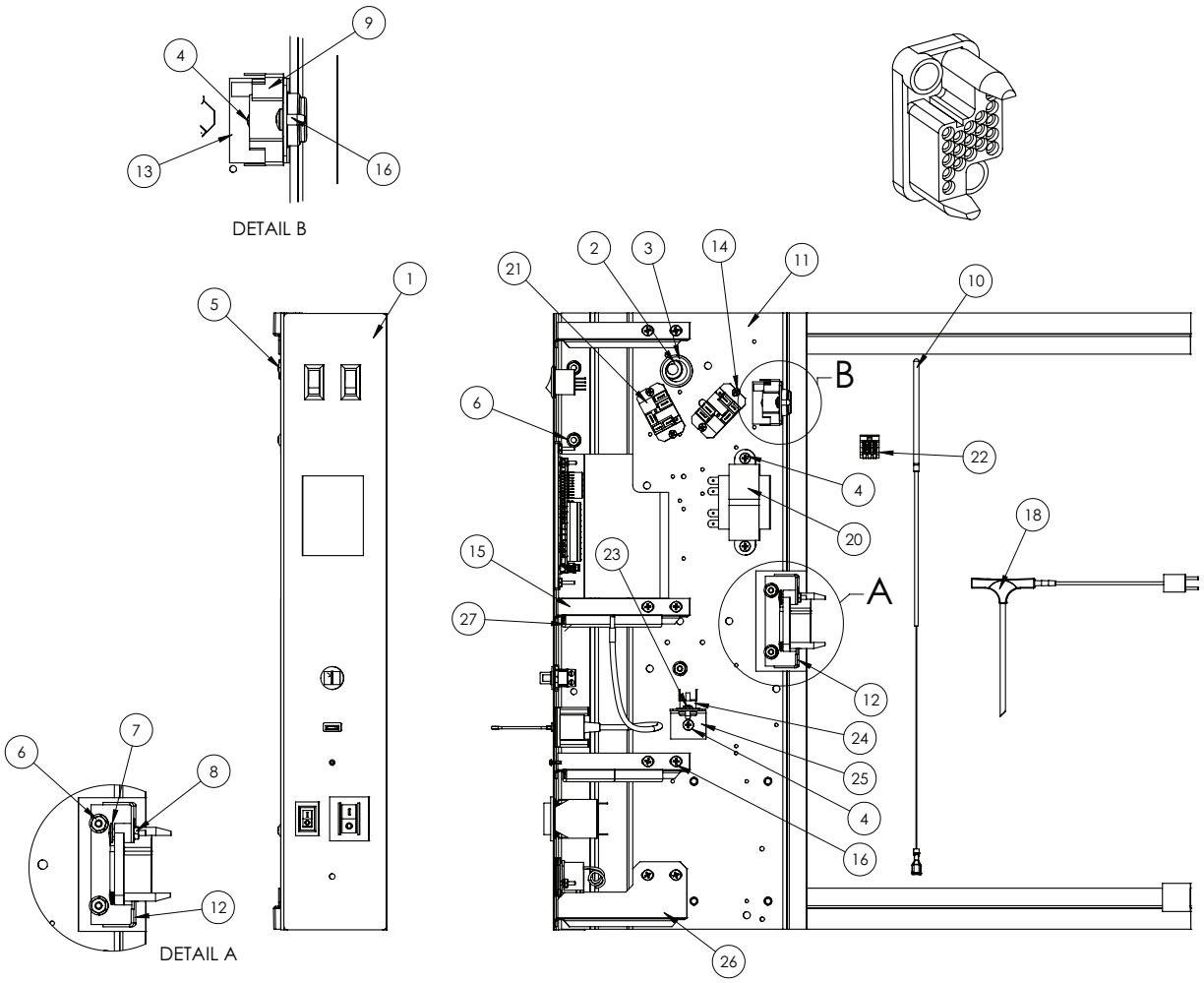

Ref. No.	Part No.	Description
1	102080	PANEL ASSY, DECAL AND SWITCHES, DFG/MKV
2	15847	GROMMET, RUBBER 11/16
3	19087	GROMMET
4	15247	SCREW, #10-16 X 5/8", SELF DRILLING
5	16384	10-24 X .500 TRUSS HEAD MACH SCREW
6	M3950	#10-24 HEX FLANGED NUT
7	M9714	SCREW, SHOULDER, AMP CONNECTOR
8	M3367	NUT, 6-32 KEPS
9	36755	SWITCH, THERMAL SPDT
10	56873	PROBE, 1K RTD 3/16 TERM
11	36483	PANEL, CONTROL MOUNTING
12	36655	BRACKET, DRAWER CONNECTOR
13	37488	BRACKET, THERMAL DISK
14	20636	TAP SCREW, 6-32 X 3/8" BRNZPLTD PAN
15	100807	SIMPLE TOUCH GUSSET
16	4812	SCREW, MACH, #10 x 3/8
17	50557	HARNESS, INF 2 SPEED (NOT SHOWN)
18	56545	MEAT PROBE, DUAL SENSOR
19	101400	HARNESS, 5400-V, SSD ADDER
20	36700	TRANSFORMER, 115/230V TO 24V 56VA
21	101708	RELAY, CONTROL, SPDT, 240V
22	39827	NUT, LEVER, WAGO
23	20785	SCREW, TAP, 8-32 x 3/8, PH PAN HEAD
24	56760	THERMAL SWITCH, MANUAL RESET
25	56792	BRACKET, THERMAL SWITCH
26	101750	BRACKET, BOTTOM SUPPORT, 5400V
27	59378	EDGE PROTECTION

NOTE: Item 1 includes items 8, 9 & 10 sown on page 14

ARTISAN CONTROL PANEL

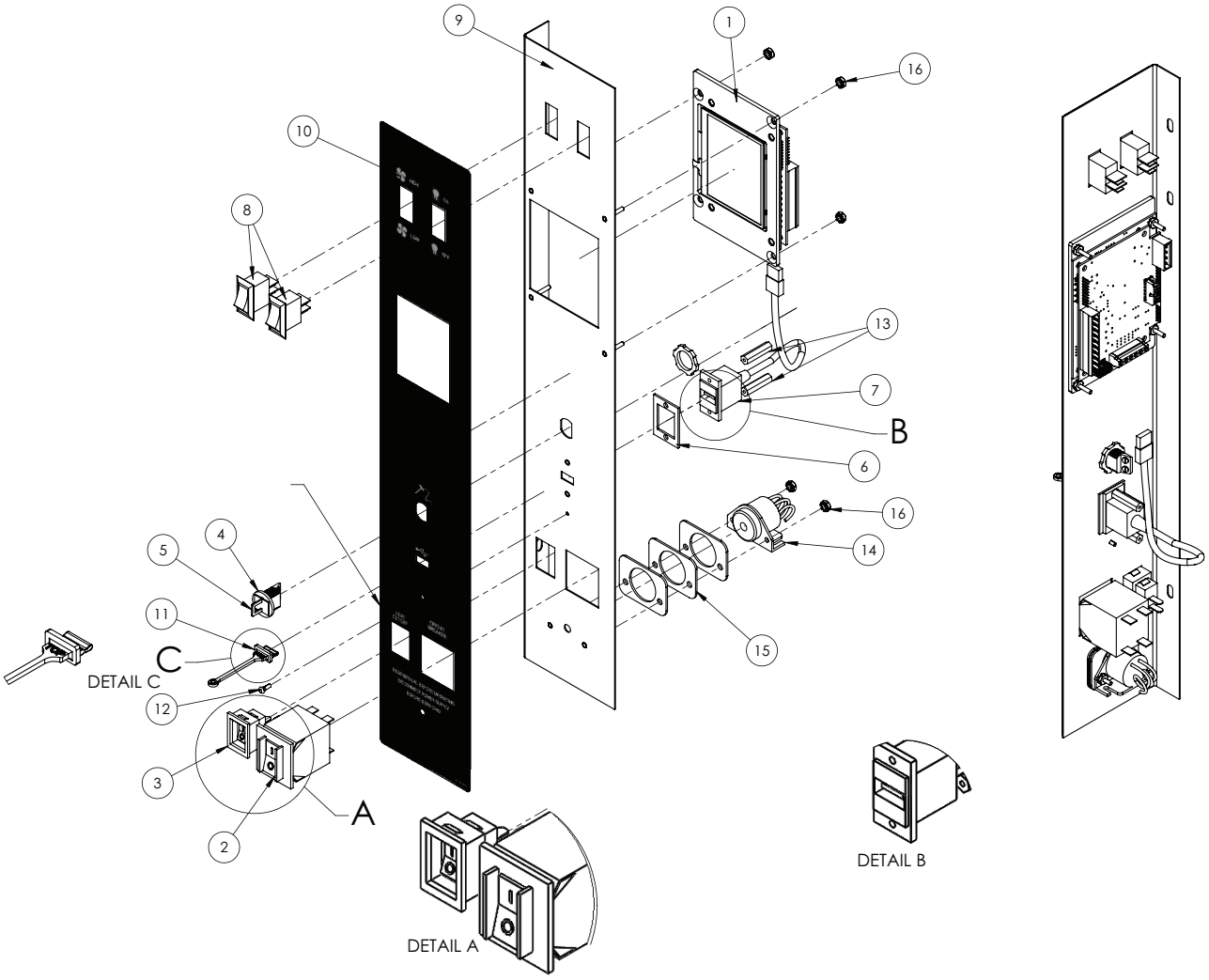

Ref. No.	Part No.	Description
1	101690	PROGRAM CNTRL, MKV/DFG, 5400V
1	101879	PROGRAM CNTRL, MKV, INSOMNIA
2	36429	CIRCUIT BREAKER, 10A
3	36376	GAS ON/OFF SWITCH
4	39781	MEAT PROBE JACK
5	39782	MEAT PROBE JACK PLUG
6	59280	SPACER, FLUSH USB
7	59565	USB CABLE, STRAIGHT
8	101330	BLACK/RED ROCKER SWITCH, 1.125 X 0.5

Ref. No.	Part No.	Description
9	101194	CONTROL PANEL, DFG/MKV, 5400V
10	101286	DECAL, 5400V, MKV/DFG
11	101653	DUST PLUG, USB
12	101665	RIVET, PUSH IN, BLACK
13	59434	STANDOFF, #4-40X1"
14	53759	BUZZER, REMOTE
15	53921	SPACER, REMOTE BUZZER
16	R5481	NUT, KEPS #4-40
	101994	KIT, ARTISAN REPL DFG/MKV
	101996	KIT, ARTISAN REPL INSOMNIA

DOOR COMPONENTS

Ref. No.	Part No.	Description
AFTER NOVEMBER, 2024		
1	101961	Kit, LH Sealed Glass Door w/Mtg. Hardware
2	101962	Kit, RH Sealed Glass Door w/Mtg. Hardware
4	59675	Pressure Lock, Sealded Glass Doors
6	101963	Kit, Curved Door Handle w/Mtg. Hardware
7	18081	Handle Top Plate w/Screws
♦	20804	Door Assy, Gls LH
♦	20803	Door Assy, Gls RH
♦	20806	Door Assy, Sld LH
♦	20805	Door Assy, Sld RH
	9036	Window Assy, Drop In (10-1/8" x 17-1/8")
	17558	Door Handle, powder coated (After 6/1/84)
	18081	Top Plate, Door Handle (After 6/1/84)
	17519	Gasket Assy, Perimeter (Before 12/1/2005)
	36876	Gasket Assy, Perimeter (After 12/01/2006)
	16448	Pressure Lock (Attaches to front of door)
	36606	Pressure Lock (Attaches to side of door)
	17311	Center Trim, Door
	4887	Chain & Turnbuckle Assy, (Before 6/1/84)
	36037	Support Assy, Lower Door w/Microswitch (After 10/10/00)
10	35702	Microswitch & Bracket Assy, Door Units after 06/84 Replaces 19978
	35419	Bracket, for Microswitch Units after 06/84
10	35918	Microswitch Assy, Door Units before 06/84 Replaces 19978
	6195	Bracket, for Microswitch Units before 06/84

BAKING COMPARTMENT COMPONENTS

Ref. No.	Part No.	Description
	4701	Rack, Wire (20-7/8" x 28-1/4") (Each) (Before 9/15/86)
	18768	Rack, Wire (20-7/8" x 28-1/4") (Each) (After 9/15/86)
	8724	Rack Support, (Set of 2) (Before 9/15/86)
	19081	Rack Support, (Set of 2) (After 9/15/86)
	19171	Stop, Rack (Set of 2)
	15637	Lamp, Interior, 220V (Before 9/24/84)
	4342	Lamp, Interior, 115V (After 9/24/84 & Before 11/14/2007)
	4922	Socket, Lamp
	20807	Window, Interior Lights w/ Retainer (Before 11/14/2007)
	17978	Retainer, Interior Window (Before 11/14/2007)
	8321	Guard, Thermostat Bulb
9	5001	Wheel Assy., Blower
	16813	Interior Baffle, Porcelain (Blower Wheel Cover)
	16814	Interior Baffle, Stainless (Blower Wheel Cover)
	8648	Screws, Baffle Mounting (Set of 4)
	90046	Brackets, Baffle Supports (Set of 4)
	38659	Crumb pan Set (LH & RH)
	57058	Halogen Lamp Assy, 20W, 12V (After 11/14/2007)
	D0128	Bulb, Halogen (After 11/14/2007) Type G4 .16" Between Pins
	57075	Bulb, Halogen (After 11/14/2007) Type G5.3 .21" Between Pins
	57075	Bulb, Halogen (After 6/1/13)
	33939	Clip, Thermistor Probe
	33088	Clip, RTD Probe

SIMPLE TOUCH CONTROL

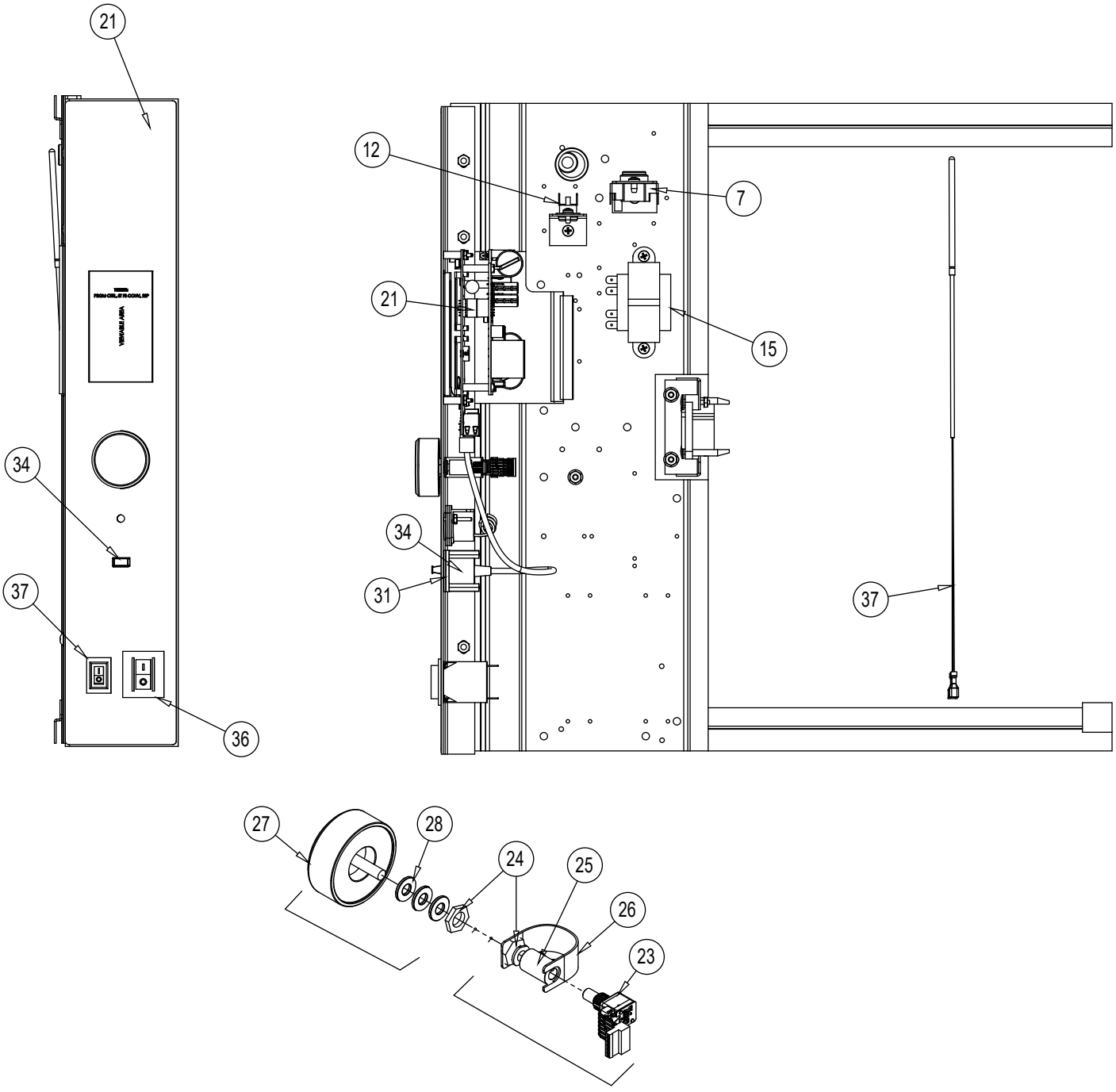

SIMPLE TOUCH CONTROL

Ref. No.	Part No.	Description
1	36483	PANEL, CONTROL MOUNTING
2	M3950	#10-24 HEX FLANGED NUT
3	100599	PANEL, CTRL MKV, ST
4	16384	10-24 X .500 TRUSS HEAD MACH SCREW
5	37488	BRACKET, THERMAL DISK
6	15247	SCREW, #10-16 X 5/8", SELF DRILLING
7	36755	SWITCH, THERMAL SPDT
8	4812	SCREW, MACH, #10 x 3/8
9	56792	BRACKET, THERMAL SWITCH
10	20785	SCREW, TAP, 8-32 x 3/8, PH PAN HEAD
11	1296	WASHER, LOCK
12	56760	THERMAL SWITCH, MANUAL RESET
13	15847	GROMMET, RUBBER 11/16
14	19087	GROMMET
15	36700	TRANSFORMER, 115/230V TO 24V 56VA
16	36655	BRACKET, DRAWER CONNECTOR
17	M9714	SCREW, SHOULDER, AMP CONNECTOR
18	M3367	NUT, 6-32 KEPS
19	59378	EDGE PROTECTION
20	100593	DECAL, DFG-ES, ST
21	100258	PRGM CTRL, ST FS CONV, 2SP
22	R5481	NUT, KEPS #4-40
23	59282	ENCODER, MANUAL CONTROL
24	60337	SHAFT, LEAD IN
25	59439	COUPLING, 1/4", SET SCREW.
26	60342	PLASTIC BRACE
27	60344	KNOB, ENCODER
28	R0732	WASHER, FLAT, #10
29	53921	SPACER, REMOTE BUZZER
30	53759	BUZZER, REMOTE
31	59280	SPACER, FLUSH USB
32	59434	STANDOFF, #4-40X1"
33	100330	DUST COVER, USB
34	59565	USB CABLE, STRAIGHT
35	36429	CIRCUIT BREAKER
36	36376	SWITCH, GAS, ON/OFF
37	56873	PROBE, 1K RTD 3/16 TERM
38	101733	FUSE, 2A 1/4" x 1-1/4" (NOT SHOWN)
	100613	HARNESS, MKV ST CTRL, RETRO (NOT SHOWN)

ROLL-IN UNITS & COMPONENTS

Ref. No.	Part No.	Description
	7514	Transport Cart, CTRE
	8542	Transport Cart, CTRE-2
	20517	Docking Assy, w/ Hardware
	8355	Docking Pins, Transport Cart (Set of 2)
	8356	Casters, 5", Transport Cart (Set of 4)
	9052	Handle, Transport Cart (Single Unit)
	8359	Catch Mechanism, Transport Cart
	8357	Locking Bar, Transport Cart
	8358	Tracks & Shelf Assy, Transport Cart
	9015	Handle, Transport Cart
	10363	Hook, Transport Cart
	18334	Liner Track, Oven Interior (Set of 2)
	24608	Dolly Assy, DBRI-S
	11207	Pan Rack w/ 5 Racks, RPR-S9
	8677	Rack, S9 Pan Rack (19" x 26") (Each)
	19475	Dolly Assy, Arlington Basket

ACCESSORIES

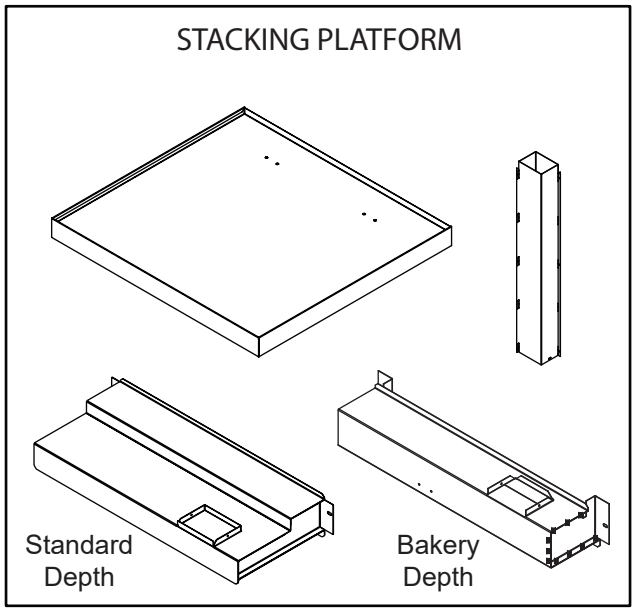

Ref. No.	Part No.	Description
	101136	Stacking Platform

EXTERIOR COMPONENTS

Ref. No.	Part No.	Description
	23190	Crown Assy.
	17766	Vent Assy., Mark V on Mark V (29" high MV)
	17767	Vent Assy., Mark V on EF (29" high MV)
	35698	Vent Assy., Mark V on Mark V (32" high MV)
	17910	Logo MARK V
	17824	Trim, Bottom S/S (w/o security package), 3-1/4" high
	17825	Trim, bottom s/s (w/o security package (6-1/2" high
	16470	Nameplate, Blodgett 10"
	21439	Control Access Panel, S/S, 28" high
	36512	Control access panel, 31-1/2" high
	17761	Back Panel, Solid S/S for 28-7/8" high ovens (Before 2/4/99)
	34734	Back Panel, Solid S/S for 28-7/8" high ovens (After 2/4/99)
	36696	Back Panel, Solid S/S for 32" high ovens
	R6471	Allen Wrench, Security (for Back Panel)
	34724	Bodyside, RH S/S (before 11-01-2005)
	39241	Bodyside, RH S/S (11-01-2005 and after)
	36407	Bodyside, RH, s/s, 30-7/8" high
	36512	Control Cover
	34725	Bodyside, LH S/S (before 11-01-2005)
	39240	Bodyside, LH S/S (11-01-2005 and after)
	37205	Bodyside, LH, s/s, 31-7/8" high
	54425	Side Heat Shield, Right or Left
	NOTE:	**The bodysides 34724 & 34725 replace 16770 & 16772.**
	16947	Bodytop, S/S (Before 2/4/99)
	34541	Bodytop, S/S (Before 11-01-2005)
	38991*	Bodytop, S/S (After 11-01-2005)
	8600	Legs, 6" w/ Bolts, S/S (Set of 4)
	8598	Legs, 25" w/ Bolts, S/S (Set of 4)
	15489	Foot, Leg S/S (Each)
	92000	Studs, Leg (Set of 4)
	7847	Bolts, Leg (Set of 8)
	6486	Open Stand w/ Feet, S/S
	11416	Open Stand w/ Casters, S/S
	16002	Caster Kit, Sgl Oven (Set of 4)
	5779	Caster Kit w/ Plate, Dbl Oven (Set of 4)
	19528	Caster Kit, Low Profile (Set of 4)
	31013	Caster Kit, Heavy Duty Low Profile (Set of 4)
	31803	Clips, Dbl Stacking (Set of 2)
	33484	Torx Bit, Security T30
	30412	Torx Bit, Security T25
	59657*	Front Trim Kit, Bodytop
	101243	Kit Vent Upgrade Electric 100 Depth
	NOTE*	***For ovens built between 11/01/05 & 03/10/17 Parts 38991 & 59657 must be replace/purchased together***

EXCLUSIVE TO KFC FAST CONTROLS-CE

Ref. No.	Part No.	Description
	M3167	Fuseholder (Electrical) CE
	M8593	Fuse, Export, (Electrical) 10AMP (Qty 2) CE
	M8662	Fuseblock, 5MMx20MM (For M6899) CE
	35703	Fuse, 250V 1AMP (For M6899) CE
	36066	Thermostat, High Limit Kit (Manual Reset) CE, Replaces M3295
	20320	Element Assy. 230/400V, 10000W
	33075	Control Harness 208/240V
	35599	Baffle and Guard Assy, Interior

EXCLUSIVE TO ARBY'S WITH MEAT PROBES

Ref. No.	Part No.	Description
	54743	Control, Meat Probe
	37134	Meat Probe
	30662	Kit, Momentary Light
	56738	Relay Switch, SPST, 24 VDC (except CE)
	36700	Transformer, 115/230 to 24V (except CE)
	36616	Knob, Control (except CE)
	37058	Relay, DPST, 25A, 24V (except CE)
	37132	Manifold, Meat Probe
	37135	Probe, Temp
	37133	Harness, Meat Probe Manifold
	37509	Manifold Assy., (Includes manifold, probe, harness, tube and grommet)
	55676	Relay DPST 30A (CE only)

EXCLUSIVE TO EXPORT

Ref. No.	Part No.	Description
	20084	Timer, 60 Minute, 240V, 50 HZ
	3574	Terminal Block, 65 Amp., 600V
	19620	Switch, Rocker, DPST, Black
	30517	Switch, Rocker, DPST, Matt Black
	15637	Lamp, Interior, 220V
	33095	Terminal Block, 6 Pole CE
	M8662	Fuseholder, In-Line CE
	33298	Fuse, 250V, 50MA CE
	21068	Switch, 4 Position Rotary CE
	18295	Switch, Pushbutton, Momentary CE
	24684	Knob, Mode CE
	36066	Thermostat, High Limit Kit (Manual Reset) CE Replaces M3295
	M3810	Probe Clip CE
	M8593	Fuse, 10 AMP CE
	M3167	Fuseholder, Type HTB-36M CE
	33150	Support Assy, Baffle CE