IU-0090-AN/ANP/ANA/ANAP

CONTENTS

1. MAIN ASS'Y
2. DOOR T-ASS'Y
3. WATER CIRCUIT
4. REFR. ASS'Y & SUB ASS'Y
5. REFR. CIRCUIT
6. ELECTRIC PARTS
7. ICE MAKING UNIT
8. DRAIN PUMP

[ICETRO] Nugget Built-in Ice Maker, 115V/60Hz(IU-0090-AN Series)

[MAIN ASS'Y]

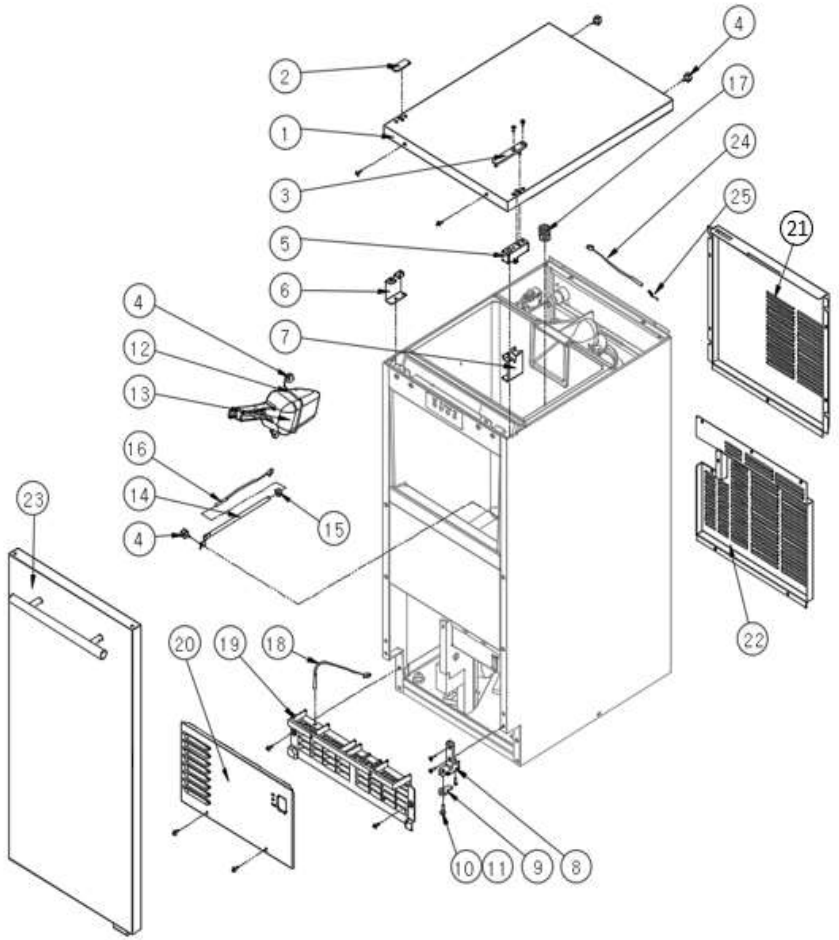

NO	ITEMS	CODE	Option	SVC	Q'TY
1	TOP COVER ASS'Y	427060410	-	YES	1
2	PACKING TOP	303018200	-	YES	1
3	DOOR HINGE TOP	321002810	-	YES	1
4	HAND SCREW	321003000	-	YES	1
5	FIXTURE TOP HINGE	321003000	-	YES	1
6	HINGE BASE BRACKET(L)	301209010	-	YES	1
7	HINGE BASE BRACKET(R)	301209000	-	YES	1
8	DOOR HINGE DOWN	321002700	-	YES	1
9	STOPPER PIECE	398009200	-	YES	1
10	WASHER DOOR	211003400	-	YES	1
11	BOLT STOPPER DOOR	214017000	-	YES	1
12	SCOOP HOLDER	323007910	-	YES	1
13	SCOOP 300	607001200	-	YES	1
14	SAFETY TC SHAFT(L220)	316004020	-	YES	1
15	CAP SENSOR 050	319005100	-	YES	4
16	EVA SENSOR SB(BLACK)	655008200	-	YES	1
17	STRAINER UPPER	605001401	-	YES	1
18	AIR SENSOR (M)	655009900	-	YES	1
19	COVER CONDENSER	317171700	-	YES	1
20	FRONT LOW-COVER(H34)	317222400	Non-ADA	YES	1
	FRONT LOW-COVER(H32)	317222300	ADA		
21	REAR COVER(UP)	317221100	-	YES	1
22	REAR VENT.-COVER(LOW, H34)	317221600	Non-ADA	YES	1
	REAR VENT.-COVER(LOW, H32)	317221200	ADA		
23	HANDLE DOOR T-ASSY(H34)	447015610	Non-ADA	YES	1
	HANDLE DOOR T-ASSY(H32)	447015600	ADA		
24	EVA SENSOR SB(YELLOW)	655008220	-	YES	1
25	SENSOR CLIP	224002400	-	YES	1

[ICETRO] Nugget Built-in Ice Maker, 115V/60Hz(IU-0090-AN Series)

[HANDLE DOOR T-ASS'Y]

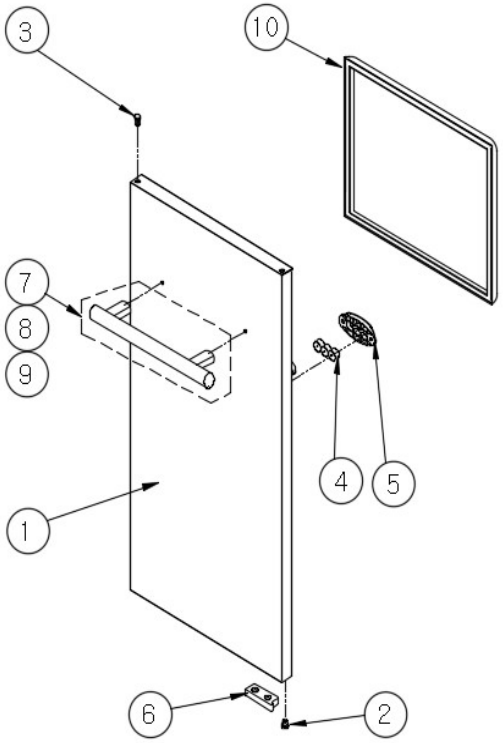

NO	ITEMS	CODE	Option	SVC	Q'TY
α	HANDLE DOOR T-ASSY(H34)	447015610	Non-ADA	YES	1
	HANDLE DOOR T-ASSY(H32)	447015600	ADA		
1	H-DOOR FOAM ASSY(H34)	447015710	Non-ADA	YES	1
	H-DOOR FOAM ASSY(H32)	447015700	ADA		
2	DOOR BEARING	327007501	-	YES	1
3	BUTTON SUPPORT	318019400	-	YES	1
4	MAGNET DOOR	322003900	-	YES	3
5	COVER MAGNET	317090700	-	YES	1
6	STOPPER STS DOOR	398009300	-	YES	1
7	HANDLE BAR	302003000	-	YES	1
8	MACHINE SCREW(TRUSS HEAD)	MTCX1022R	-	YES	2
9	SCREW SET	GA0C01000	-	YES	2
10	GASKET DOOR	656001004	-	YES	1

[ICETRO] Nugget Built-in Ice Maker, 115V/60Hz(IU-0090-AN Series)

[WATER CIRCUIT ASS'Y]

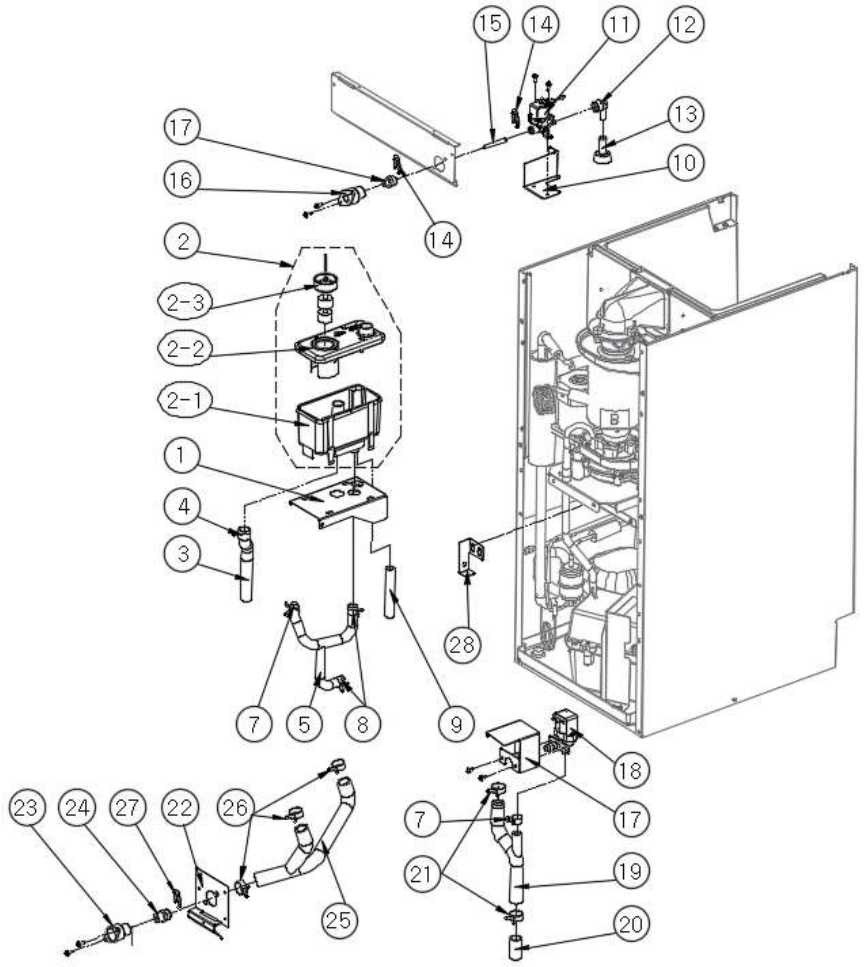

NO	ITEMS	CODE	Option	SVC	Q'TY
1	WATER TANK B-BRACKET	301207200	-	YES	1
2	WATER RESERVOIR ASS'Y	470003700	-	YES	1
2-1	WATER RESERVOIR	654000500	-	YES	1
2-2	WATER RESERVOIR COVER	654000600	-	YES	1
2-3	ASSY WATER LEVEL SENSOR	722014501	-	YES	1
3	HOSE DRAIN PUMP	229030310	-	YES	1
4	BAND SPRING 21	203003300	-	YES	1
5	DRAIN HOSE (EVA IN, S-VALVE)	229035500	-	YES	1
7	BAND SPRING 16	203004100	-	YES	2
8	BAND SPRING 18	203003900	-	YES	2
9	SILICON HOSE (OVER FLOW)	229029400	-	YES	0.11M
10	WATER INLET V/V BRACKET	301207300	-	YES	1
11	WATER VALVE(DC 24V)	340032400	-	YES	1
12	STEM ELBOW	398015000	-	YES	1
13	RESERVOIR INLET	319007801	-	YES	1
14	LOCKING CLIP 1/4"	224002200	-	YES	3
15	PE TUBE(O.D 1/4")	229013600	-	YES	0.055M
16	SOCKET 1/8"-3/8" NPT	215013500	-	YES	1
17	STRAIGHT ADAPTOR	398013400	-	YES	1
18	WATER VALVE	340029500	-	YES	1
19	DRAIN HOSE (SOL V/V-OUT))	229035800	-	YES	1
20	PIPE	325011400	-	YES	1
21	BAND SPRING 23	203002200	-	YES	2
22	DRAIN SOCKET BRACKET	301206900	-	YES	1
23	SOCKET-NPT(IN:3/8", OUT:3/4")	215020300	-	YES	1
24	STRAIGHT ADAPTOR	398014000	w/o Drain Pump	-	0
			with Drain Pump	YES	1
25	DRAIN HOSE (NO PUMP)	229035700	w/o Drain Pump	YES	1
			with Drain Pump	-	0
26	BAND SPRING 23	203002200	w/o Drain Pump	YES	3
			with Drain Pump	-	0
27	LOCKING CLIP 1/4"	224002200	w/o Drain Pump	-	0
			with Drain Pump	YES	1
28	PIPE FIXING BRACKET	301216900	-	YES	1

[ICETRO] Nugget Built-in Ice Maker, 115V/60Hz(IU-0090-AN Series)

[REFRIGERATION & SUB-UNIT ASS'Y]

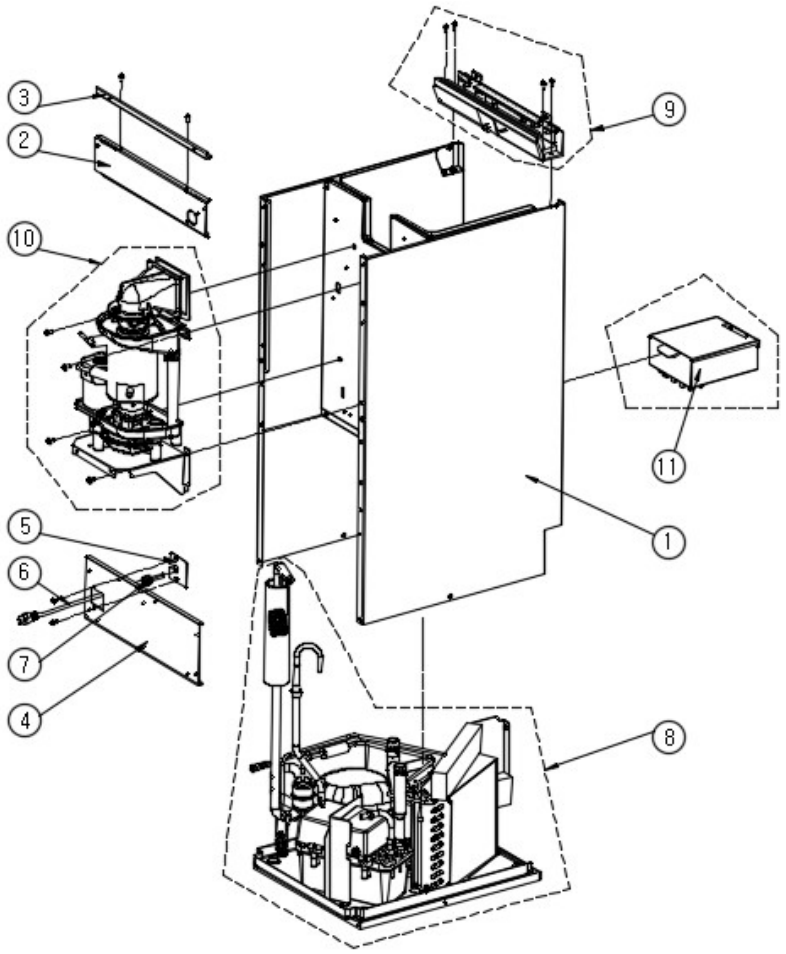

NO	ITEMS	CODE	Option	SVC	Q'TY
1	BODY FOAM ASS'Y(H34)	467020530	Non-ADA	NO	1
	BODY FOAM ASS'Y(H32)	467020520	ADA		
2	REAR REINFORCE(UP)	317221000	-	YES	1
3	REAR TOP-BRACKET	301209800	-	YES	
4	REAR REINFORCE PLATE	317220900	-	YES	1
5	BRACKET POWER CORD	301207000	-	YES	1
6	ASSY POWER CORD	722017900	-	YES	1
7	CORD PUSH	381010700	-	YES	1
8	BASE SUB ASS'Y(H34)	483023570	Non-ADA, R-513a	NO	1
		483023510	Non-ADA, R-134a		
	BASE SUB ASS'Y(H32)	483023500	ADA, R-513a		
		483023500	ADA, R-134a		
9	UPPER REINFORCE & DISPLAY ASS'Y	416015500	-	YES	1
10	ICE MAKING UNIT(NUGGET)	409045700	-	YES	1
11	CONTROL BOX ASSY	426073400	-	YES	1

[ICETRO] Nugget Built-in Ice Maker, 115V/60Hz(IU-0090-AN Series)

[REFRIGERATION CIRCUIT]

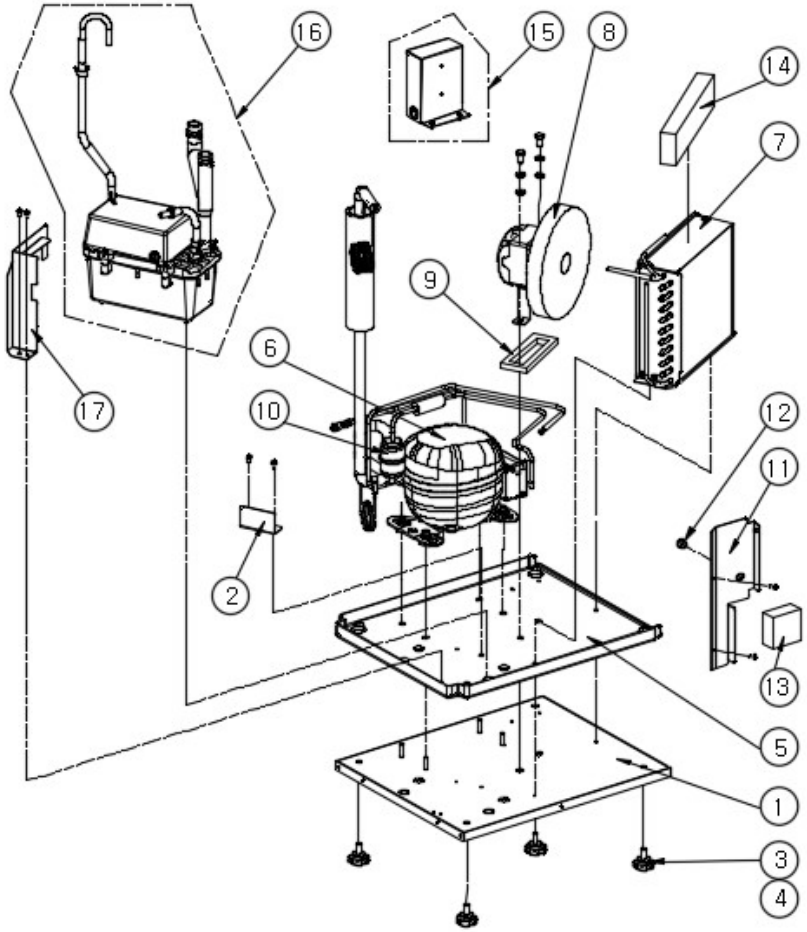

NO	ITEMS	CODE	Option	SVC	Q'TY
1	BASE PLATE W-ASSY	318041500	-	YES	1
2	DRAIN PUMP FIX BRACKET	301214200	-	YES	1
3	O-RING (P8)	303038500	-	YES	4
4	LEVELLING FOOT	302002900	-	YES	4
5	BASE DRAIN PLATE	318041700	-	YES	1
6	COMP/TFS4.5FT	394023900	-	YES	1
6-1	START-RELAY	357021300	-	YES	1
6-2	OLP	658012400	-	YES	1
6-3	START CAPACITOR	659022300	-	YES	1
6-4	HARNESS COMP	377181300	-	YES	1
7	CONDENSER ASSY(H34)	411035510	Non-ADA	YES	1
	CONDENSER ASSY(H32)	411035500	ADA		
8	ASSY FAN MOTOR(FAN ø175 / EURO)	406008610	R-513a	YES	1
	ASSY FAN MOTOR(FAN ø200 / EURO)	406008600	R-134a		
9	FOAM-WATER PREVENT(FAN)	306047400	-	YES	1
10	FILTER DRYER	372002800	-	YES	1
11	COND. SIDE BRACKET	301208601	Non-ADA	YES	1
		301208611	ADA		
12	GROMMET BUSHING	232003800			
13	FOAM COVER WIND	306020600			
14	FOAM COVER WIND(TOP)	306020610	Non-ADA	YES	1
		306036400	ADA		
15	SMPS BOX ASSY	426073500	-	YES	1
		426073510	-	-	-
16	DRAIN PUMP ASSY(BLDC)	417020950	w/o Drain Pump	-	0
			with Drain Pump	YES	1
17	DRAIN PUMP FIXTURE(W/D FOAM)	318042030	w/o Drain Pump	-	0
			with Drain Pump	YES	1

[ICETRO] Nugget Built-in Ice Maker, 115V/60Hz(IU-0090-AN Series)

[ELECTRIC PARTS]

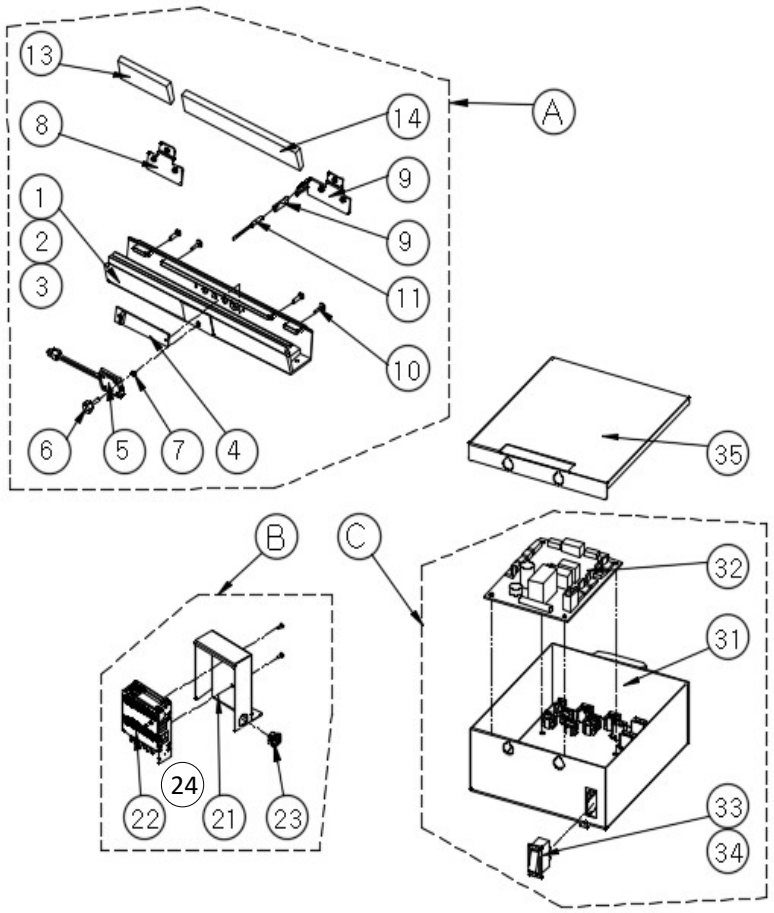

NO	ITEMS	CODE	Option	SVC	Q'TY
A	UPPER REINFORCE & DISPLAY ASS'Y	416015500	-	YES	1
1	FRONT REINFORCE(UP)-후가공	348020800	-	NO	1
2	DISPLAY FILM(LED)	380161000	-	NO	1
3	LAMP FILM-COVER	380161800	-	NO	1
4	DISPLAY PCB	367015500	-	NO	1
5	RGB LED ASSY	223004600	-	NO	1
6	HAND SCREW	210819700	-	NO	1
7	NUT HEX	C00B02000	-	NO	1
8	HINGE FIX BRACKET(R)	301207400	-	NO	1
9	HINGE & SENSOR BRACKET	301209400	-	NO	1
10	MACHINE SCREW(FLAT HEAD M5x15)	MFCX1025R	-	NO	4
11	ASSY SENSOR MAGNET	701002000	-	NO	1
12	본드수축튜브	541000900	-	NO	1
13	FOAM UPPER REIN.(BACK-R)	306046820	-	NO	1
14	FOAM UPPER REIN.(BACK-L)	306046810	-	NO	1
B	SMPS BOX ASSY	426073500	-	YES	1
		426073510	-	-	-
21	BODY CASE(SMPS)	301208700	-	NO	1
		301208720	-	-	-
22	SMPS	629001300	-	NO	1
		629001500	-	-	-
23	GROMMET BUSHING	232003600		NO	1
24	HARNESS SMPS	377184900	-	NO	1
C	CONTROL BOX ASSY	426073400	-	YES	1
31	CONTROL BOX	374149900	-	NO	1
32	MAIN PCB	367015401	-	YES	1
33	S/W 3L	355009800	-	YES	1
34	COVER S/W	355008900	-	YES	1
35	CONTROL BOX COVER	374150100	-	YES	1

[ICETRO] Nugget Built-in Ice Maker, 115V/60Hz(IU-0090-AN Series)

[REFRIGERATION CIRCUIT]

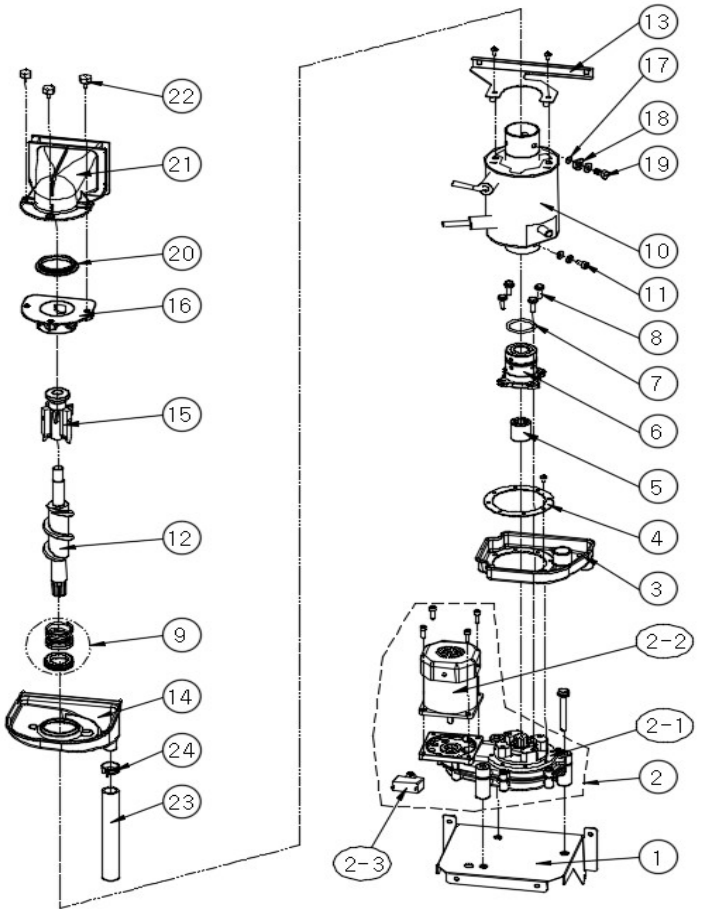

NO	ITEMS	CODE	Option	SVC	Q'TY
α	ICE MAKING UNIT(NUGGET)	409045700	-	YES	1
1	BASE BRACKET(G-BOX)	301207100	-	NO	1
2	MOTOR+GEAR BOX ASSY(1:200, 40W)	406028500	-	YES	1
2-1	GEAR BOX(RATIO 1:200)	406028000	-	NO	1
2-2	GEAR MOTOR(40W)	406028600	-	NO	1
2-3	CAPACITOR	387004800	-	YES	1
3	DRAIN PAN(G-BOX)	604003000	-	NO	1
4	COVER DRAIN-PAN	301191900	-	NO	1
5	SPLINE COUPLING	612000800	-	NO	1
6	HOUSING ASSY	491000900	-	NO	1
7	O-RING	303038800	-	NO	1
8	BOLT HEX SEMS (스프링+평와셔)	214028920	-	NO	4
9	MECHANICAL SEAL	303036900	-	YES	1
10	EVAPORATOR FORM ASSY	409045603	-	NO	1
11	HEX WRENCH BOLT SEMS(스프링+평와셔)	210813700	-	NO	4
12	AUGER(Φ44.4xL240XP45)	430005300	-	YES	1
13	EVA FIX BRACKET	317221400	-	NO	1
14	DRIP PAN(EVA FOAM)	604003100	-	NO	1
15	E-HEAD & CUTTER ASSY	491001030	-	YES	1
15-1	CUTTER	696001120	-	NO	1
15-2	EXTRUDING HEAD ASSY(N-6)	491000840	-	NO	1
16	SPOUT FLANGE	450001100-	-	YES	1
17	O-RING NBR	303032000	-	YES	3
18	HEAD LOCKING WASHER	443062601	-	YES	3
19	HEX WRENCH BOLT SEMS(스프링와셔)	214027910	-	YES	3
20	PACKING SPOUT	303040500	-	YES	1
21	SPOUT	450001000	-	YES	1
22	HAND SCREW	210804502	-	YES	3
23	SILICON HOSE (OVERFLOW)	229029500	-	YES	0.165M
24	BAND SPRING 23	203002200	-	YES	1

[ICETRO] Nugget Built-in Ice Maker, 115V/60Hz(IU-0090-AN Series)

[DRAIN PUMP ASS'Y(BLDC)]

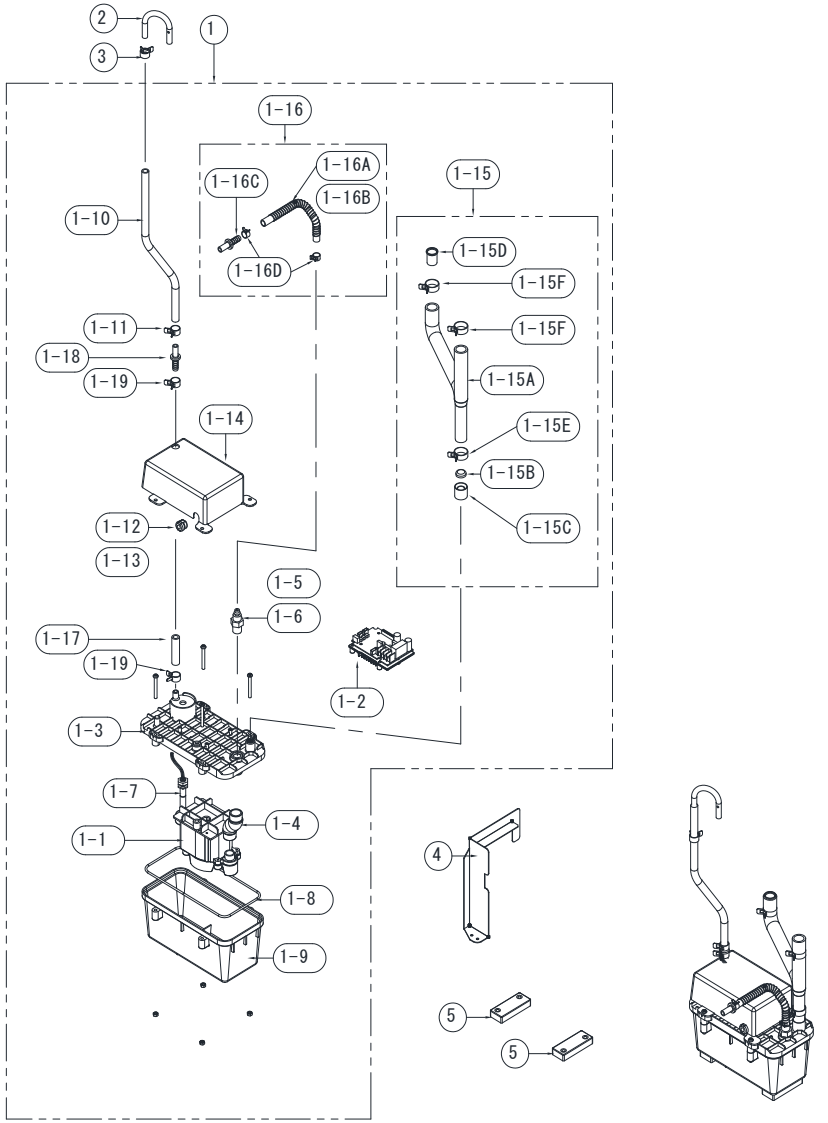

NO	ITEMS	CODE	Option	SVC	Q'TY
α	IPK-61B : Drain Pump service kit included all parts for cubic and nugget models	DP0059028710	for Cubic & Nugget Models	YES	1
0	TOTAL DRAIN PUMP ASSY(BLDC)	417020860	Non-ADA	NO	1
		417020870	ADA		
1	DRAIN PUMP ASSY(BLDC)	417020950	Non-ADA	NO	1
		417020960	ADA		
1-1	BLDC DRAIN PUMP MOTOR	353035410	-	NO	1
1-2	BLDC DRIVE PCB(115V)	367014900	-	NO	1
1-3	HOUSING PUMP BODY	646000421	-	NO	1
1-4	HOSE TWIST	229011810	-	NO	1
1-5	CHECK VALVE	340011200	-	NO	1
1-6	PACKING CHECK VALVE	303020100	-	NO	1
1-7	FLOAT SWITCH ASSY	470000901	-	NO	1
1-8	PACKING WATER BOX	303041700	-	NO	1
1-9	WATER BOX	646001102	-	NO	1
1-10	HOSE-PVC	229009700-	Non-ADA	NO	0.365M
			ADA		0.32M
1-11	BAND SPRING 12	203002600	-	NO	1
1-12	HARNESS PUMP POWER	377173300	-	NO	1
1-13	CORD PUSH	381000200	-	NO	1
1-14	COVER TOP PUMP	646000602	-	NO	1
1-15	WATER SUPPLY HOSE ASS'Y	229035670	Non-ADA	YES	1
		229035680	ADA		
1-15A	DRAIN HOSE *CUT 13mm(229035640)	229035600	Non-ADA	YES	1
	DRAIN HOSE *CUT 45mm(229035610)		ADA		
1-15B	FILTER CAP	605002000	-	NO	1
1-15C	HOSE RUBBER	303044400	-	NO	1
1-15D	PACKING DRAIN PUMP	303055400	-	NO	1
1-15E	BAND SPRING 20	203004200	-	NO	1
1-15F	BAND SPRING 23	203002200	-	NO	2
1-16	DRAIN HOSE ASS'Y	468020700	Non-ADA	YES	1
		468020720	ADA		
1-16A	HOSE-PVC	229009700-	Non-ADA	NO	0.12M
			ADA		0.3M
1-16B	SPRING HOSE	323004000	-	NO	1
1-16C	TUBE TO HOSE STEM	398014200	-	NO	1
1-16D	BAND SPRING 12	203002600	-	NO	2
1-17	SILICON HOSE	229033800	-	NO	0.05M
1-18	TUBE TO HOSE STEM	398014200	-	NO	1
1-19	BAND SPRING 13	203004400	-	NO	2
2	U-PIPE(AIR)	325163000	-	YES	1
3	BAND SPRING 12	203002600	-	YES	1
4	DRAIN PUMP ASSY(BLDC)	318042030	Non-ADA	YES	1
		318042010	ADA		
5	PUMP PACKING	229036600	-	YES	2