Revised 06/25/2020

WM-0460-AC/AH-22

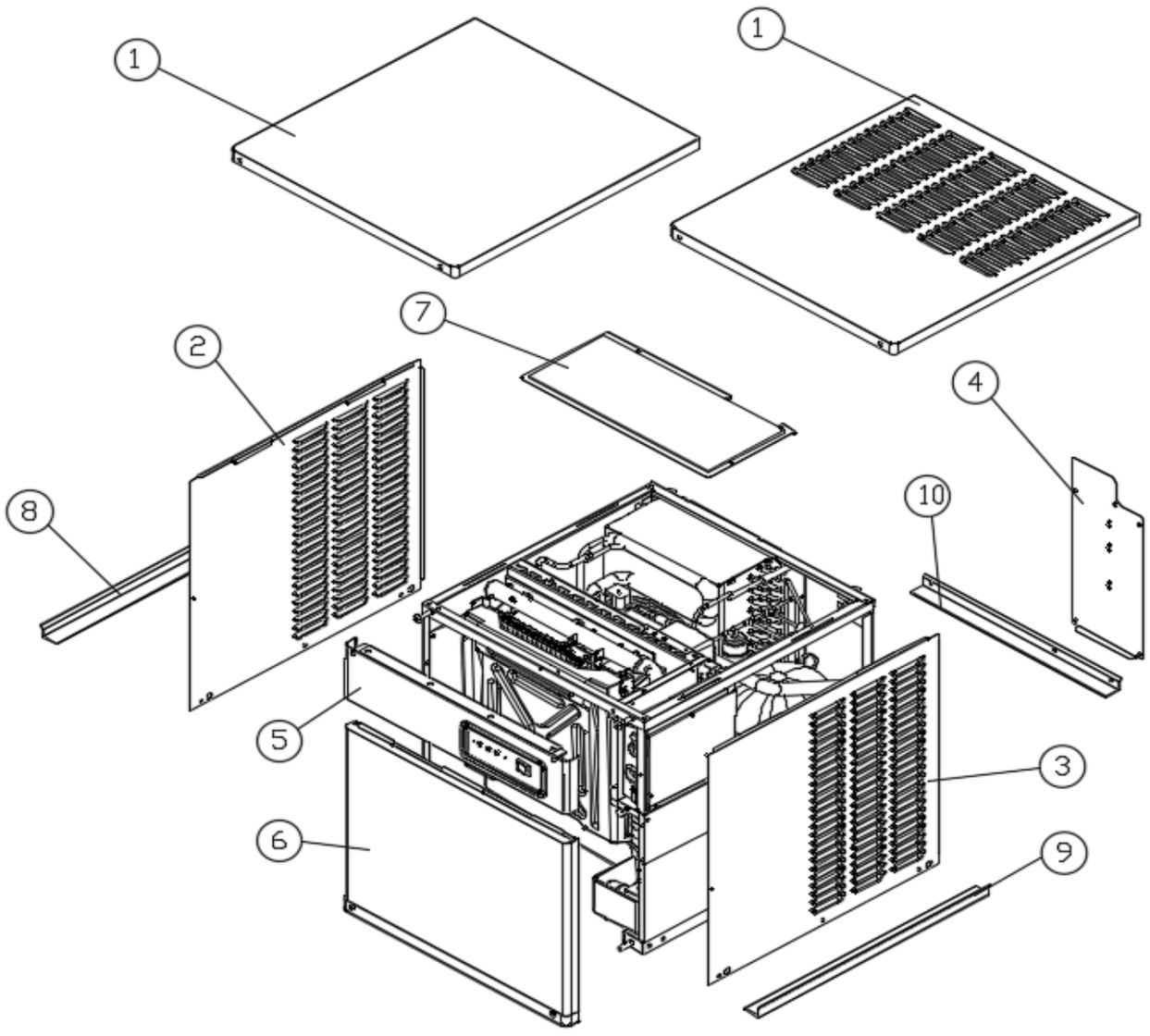

* Manufactured before January 2018

NO	ITEMS	* CODE
1	TOP COVER	317149500
2	SIDE PANEL L	349082604
3	SIDE PANEL R	349082504
4	BACK PANEL	349084200
5	FRONT UPPER COVER ASSY	432037900
6	FRONT LOWER COVER ASSY	432040700
7	ASSY EVA COVER	427012000
8	WATER BLOCK SIDE	386005800
9	WATER BLOCK SIDE_RIGHT	386006100
10	WATER BLOCK BACK	386006200

** Manufactured after January 2018

NO	ITEMS	** CODE
1	TOP COVER	317194800
4	BACK PANEL	349084201

Revised 06/25/2020

WM-0460-AC/AH-22

[FRONT UPPER COVER ASSY]

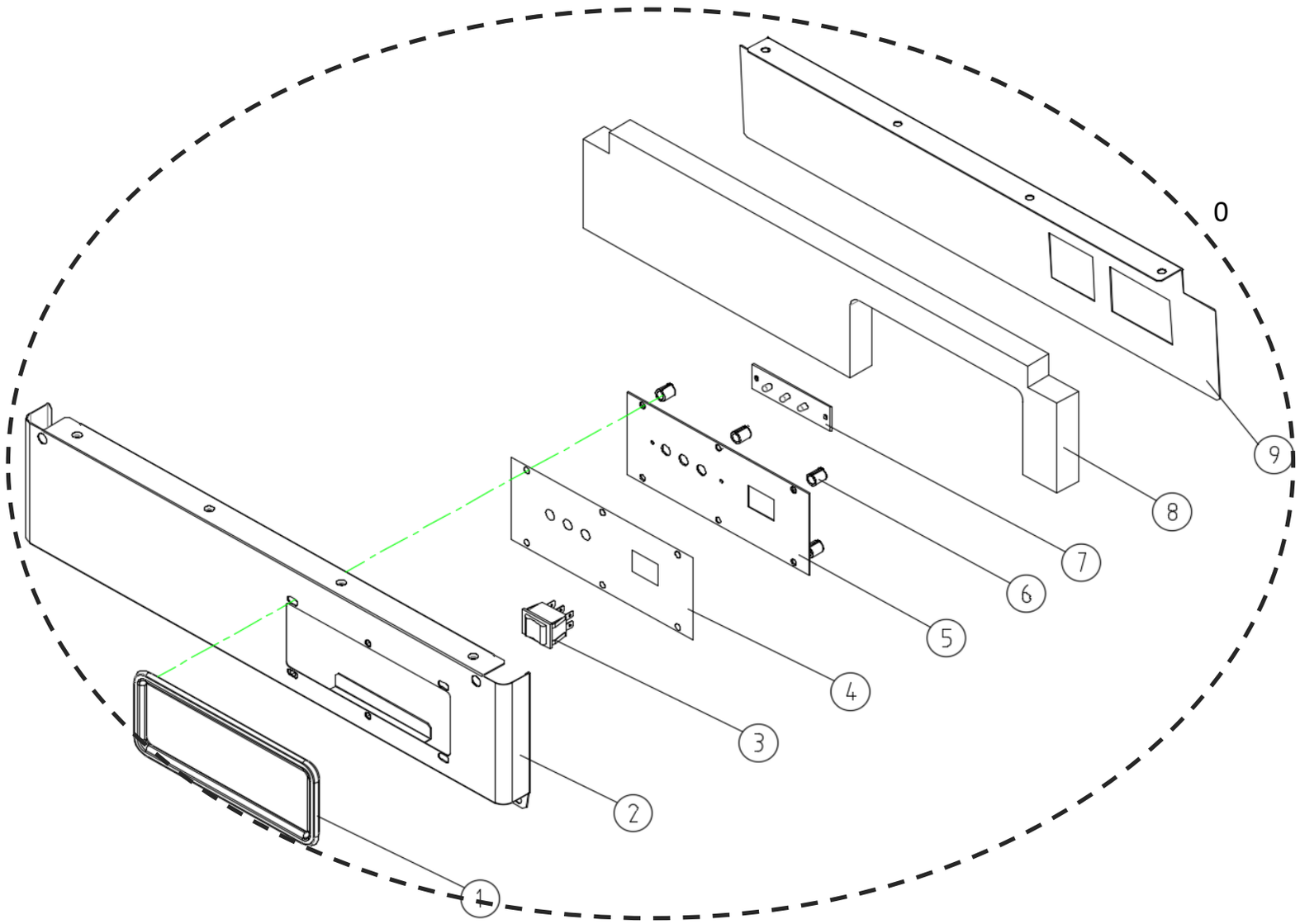

NO	ITEMS	CODE
0	FRONT UPPER COVER ASSY	432037900
1	BUTTON FRAME	440009604
2	FRONT UPPER COVER	317147003
3	3L S/W MAIN(6P,15A,250VAC)	355007100
4	FRONT DISPLAY	440028600
5	BRACKET PCB	301062600
6	SUPPORT PCB * 6EA	314011700
6-1	SCREW(FH,M3,14, MFZN) * 6EA	210811400
7	DISPLAY PCB ASSY	415001200
8	FOAM PE (FRONT UPPER)	306031600
9	COVER FRONT UPPER	317147103

Revised 06/25/2020

WM-0460-AC/AH-22

[FRONT LOWER COVER ASSY]

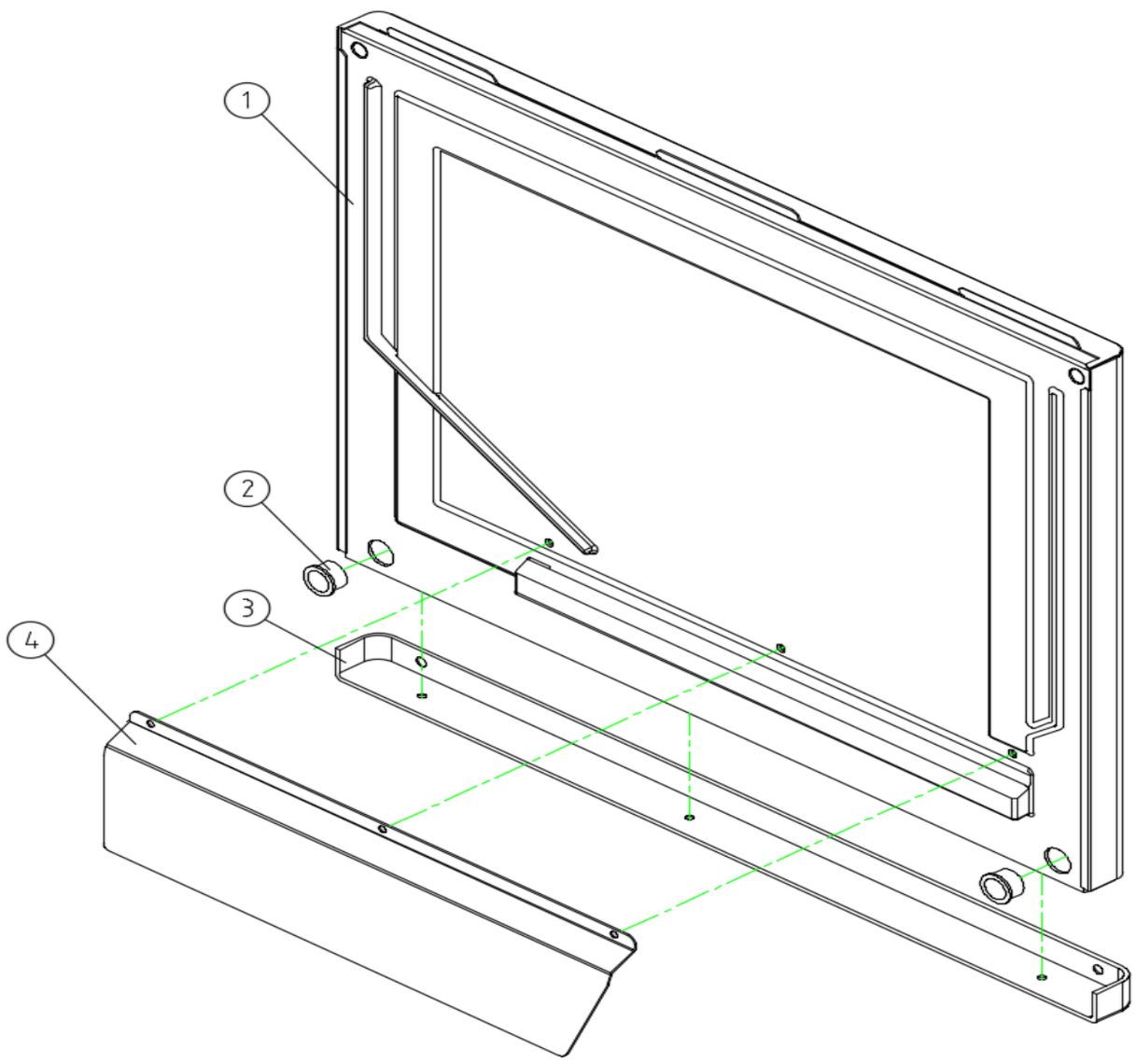

NO	ITEMS	CODE
1	FRONT LOWER COVER ASSY	432040700
2	GROMMET BUSHING * 2EA	232003600
3	FRONT LOWER CAP	341013100
4	WATER GUIDE (P)	317170310

Revised 09/18/2020

WM-0460-AC/AH-22

[CONTROL BOX]

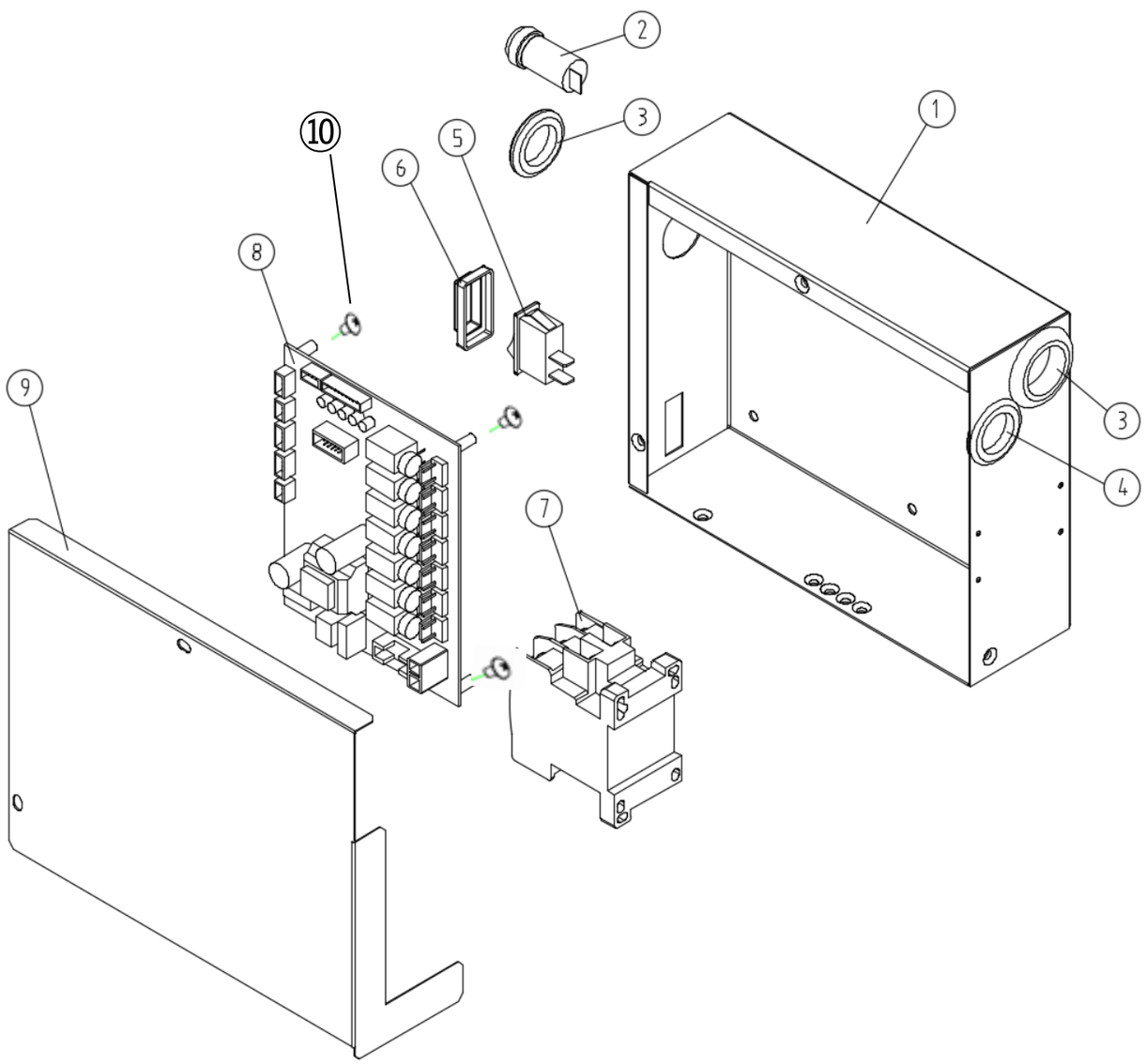

NO	ITEMS	CODE
1	CONTROL BOX	N/A
2	PUSH BUTTON	355014700
3	BUSHING * 2EA	232000500
4	BUSHING	232000400
5	S/W 2L	355009100
6	COVER S/W	355008900
7	MAGNETIC CONTACTOR	322002200
8	MAIN BOARD (V7.0)	415008807
9	CONTROL BOX COVER	317157000
10	SCREW(PH,M3*6) * 4EA	AAAA01010

Revised 09/18/2020

WM-0460-AC/AH-22

[WATER IN/OUT ASSY]

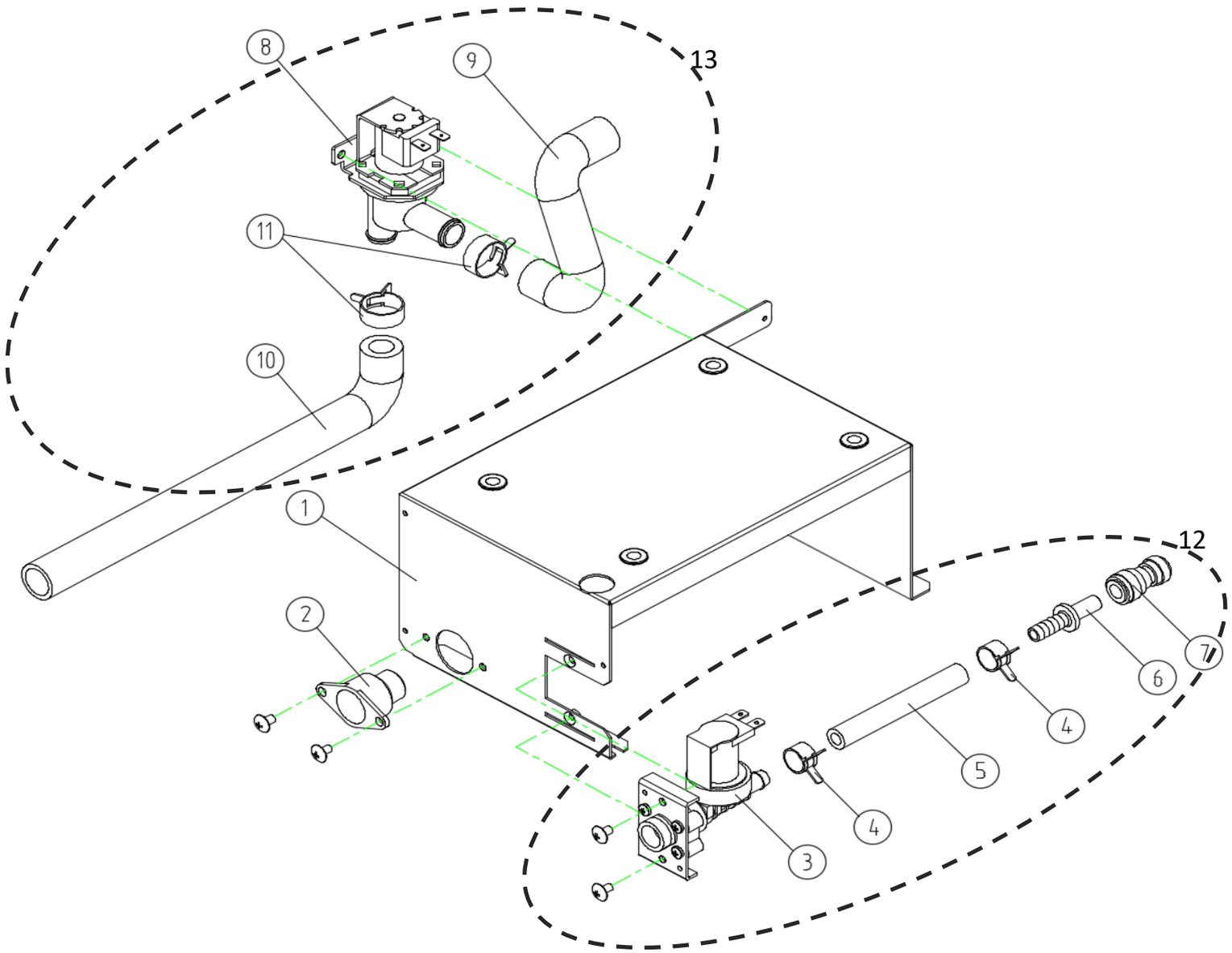

NO	ITEMS	CODE
1	BASE PLATE COMP	317156200
2	SOCKET (115V/60HZ-NPT)	215013400
2-1	SCREW MACHINE(TH M4*12) * 2EA	AACB02030
3	WATER INLET VALVE	340027500
	* Must replace both #340027500 & #415008807 (Main board V7.0)	
3-1	SCREW MACHINE(TH M4*12) * 2EA	AACB02030
4	BAND SPRING 15 * 2EA	203003800
5	BRAIDED SILICONE HOSE(ID8.0 OD15.0)	229027800
6	TUBE TO HOSE STEM(3/8", PI251212S)	398014200
7	REDUCING STRAIGHT(3/8", PI201208S)	398014100
8	WATER DUMP VALVE	340026600
9	HOSE CONNECT	229027200
10	HOSE CONNECT OUT	229027300
11	BAND SPRING 23 * 2EA	203002200
12	INLET WATER VALVE ASSY	411022100
13	DRAIN VALVE ASSY	417017200

Revised 06/25/2020

WM-0460-AC/AH-22

[EVAPORATOR PLATING ASSY]

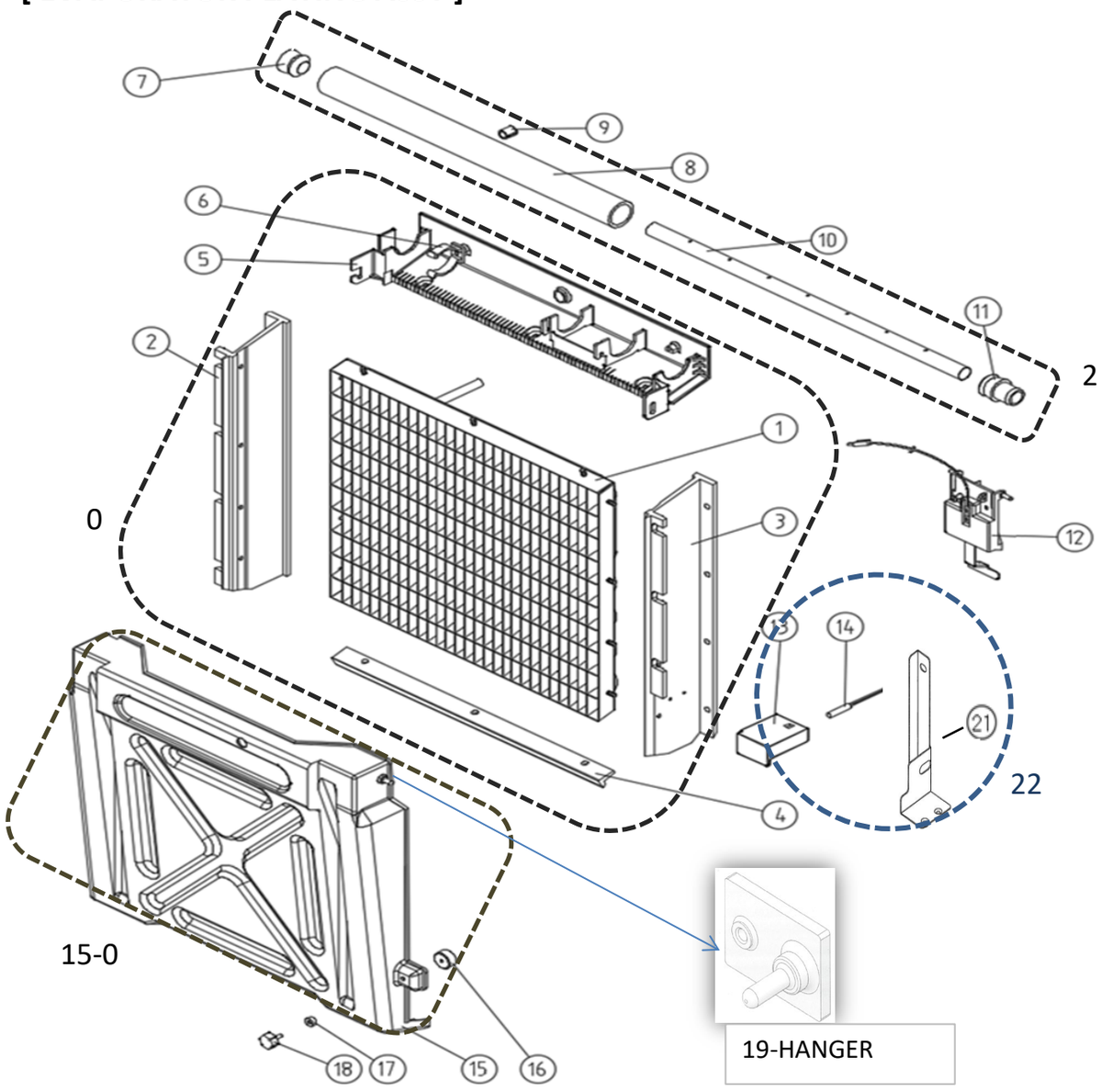

NO	ITEMS	* CODE
0	ASSY EVAPORATOR-C	409043000
	ASSY EVAPORATOR-H	409043010
1	EVAPORATOR-C	N/A
	EVAPORATOR-H	N/A
2	EVAP FRAME (L)	339011600
3	EVAP FRAME (R)	339011700
4	EVAP FRAME DOWN	339011000
5	EVAP FRAME TOP ASSY	447011100
6	FL CLIP(PC)	224002300
7	LEFT PIPE CAP	319004301
8	DISTRIBUTOR PIPE	325107001
9	BUSHING	310004301
10	INNER DISTRIBUTOR PIPE	325107100
11	RIGHT PIPE CAP	319004401
12	ASSY TOP SENSOR ICE	427025900
22	MAGNET SENSOR & BRACKET KIT	K41002000
13	HOUSING	N/A
14	SENSOR	701002000
16	MAGNET	322005600
21	BRACKET	N/A
15-0	WATER CURTAIN ASSY	468013400
15	WATER CURTAIN	635002001
17	SUPPORT PCB	314011700
18	HAND SCREW	210804501
19	HANGER * 2EA	341012902
20	ASSY BUDER	426055500

* Manufactured before January 2018

NO	ITEMS	** CODE
0	ASSY EVAPORATOR-C	409041000
	ASSY EVAPORATOR-H	409041010
1	EVAPORATOR-C	N/A
	EVAPORATOR-H	N/A
22	MAGNET SENSOR KIT	K41002000
13	HOUSING	N/A
14	SENSOR	701002000
16	MAGNET	322005600
21	BRACKET	N/A

** Manufactured after January 2018

Revised 06/25/2020

WM-0460-AC/AH-22

[WATER TROUGH ASSY]

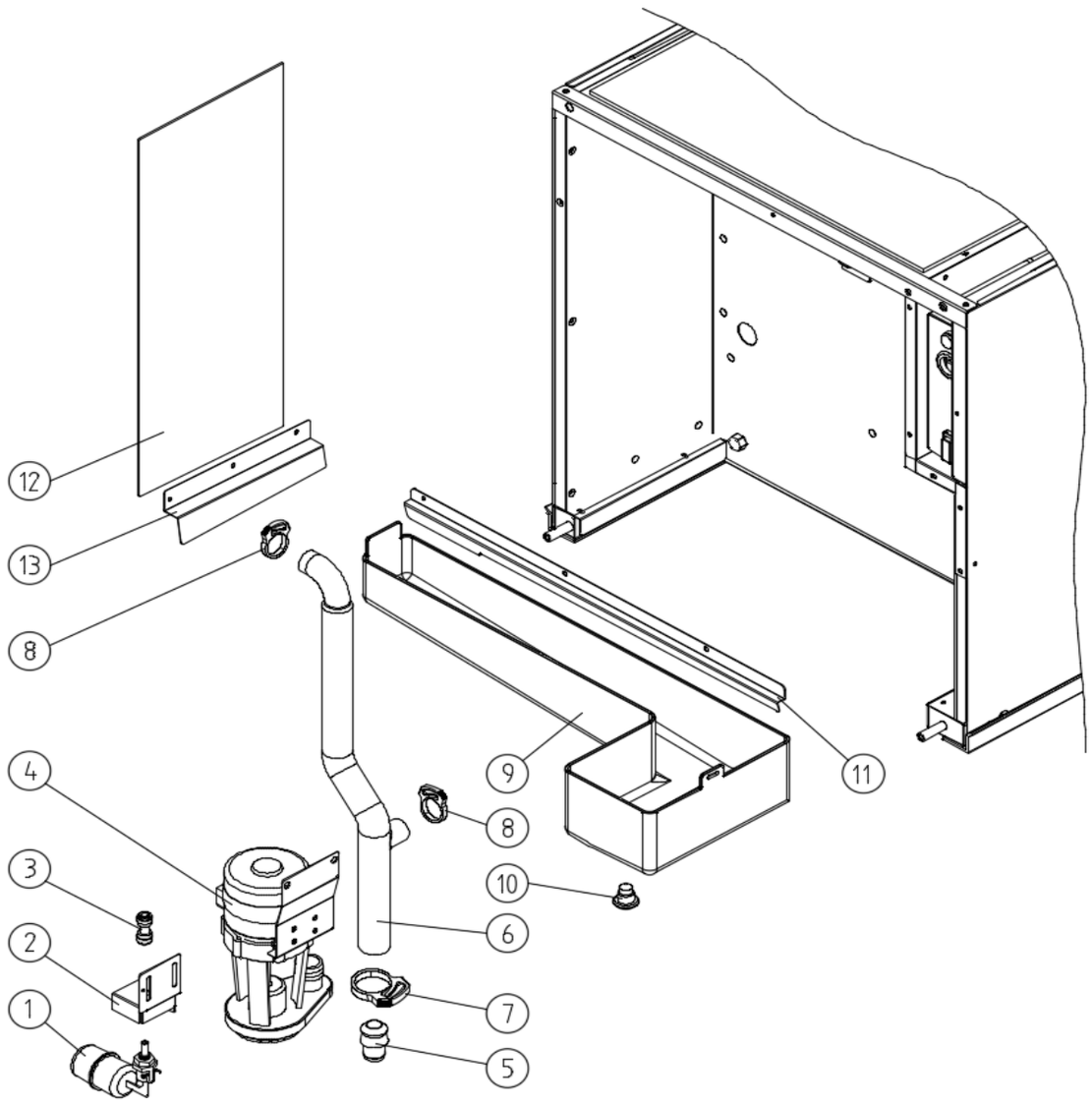

* Manufactured before January 2018

NO	ITEMS	* CODE
1	FLOAT ASSY	470001400
2	BRACKET FLOAT	341014000
3	EQUAL STRAIGHT(1/4", PI0408S)	398012200
4	WATER PUMP	406012800
5	RIGHT PIPE CAP	319006500
6	WATER PUMP OUT HOSE	229027100
7	CLAMP HOSE Ø28~33	229026600
8	CLAMP HOSE ø22	229008100
9	WATER TROUGH	604002202
10	PLUG	303022000
11	WATER TROUGH GUIDE	317150920
12	N/A	N/A
13	N/A	N/A

** Manufactured after January 2018

NO	ITEMS	** CODE

Revised 06/25/2020

WM-0460-AC/AH-22

[REFRIGERATION PART]

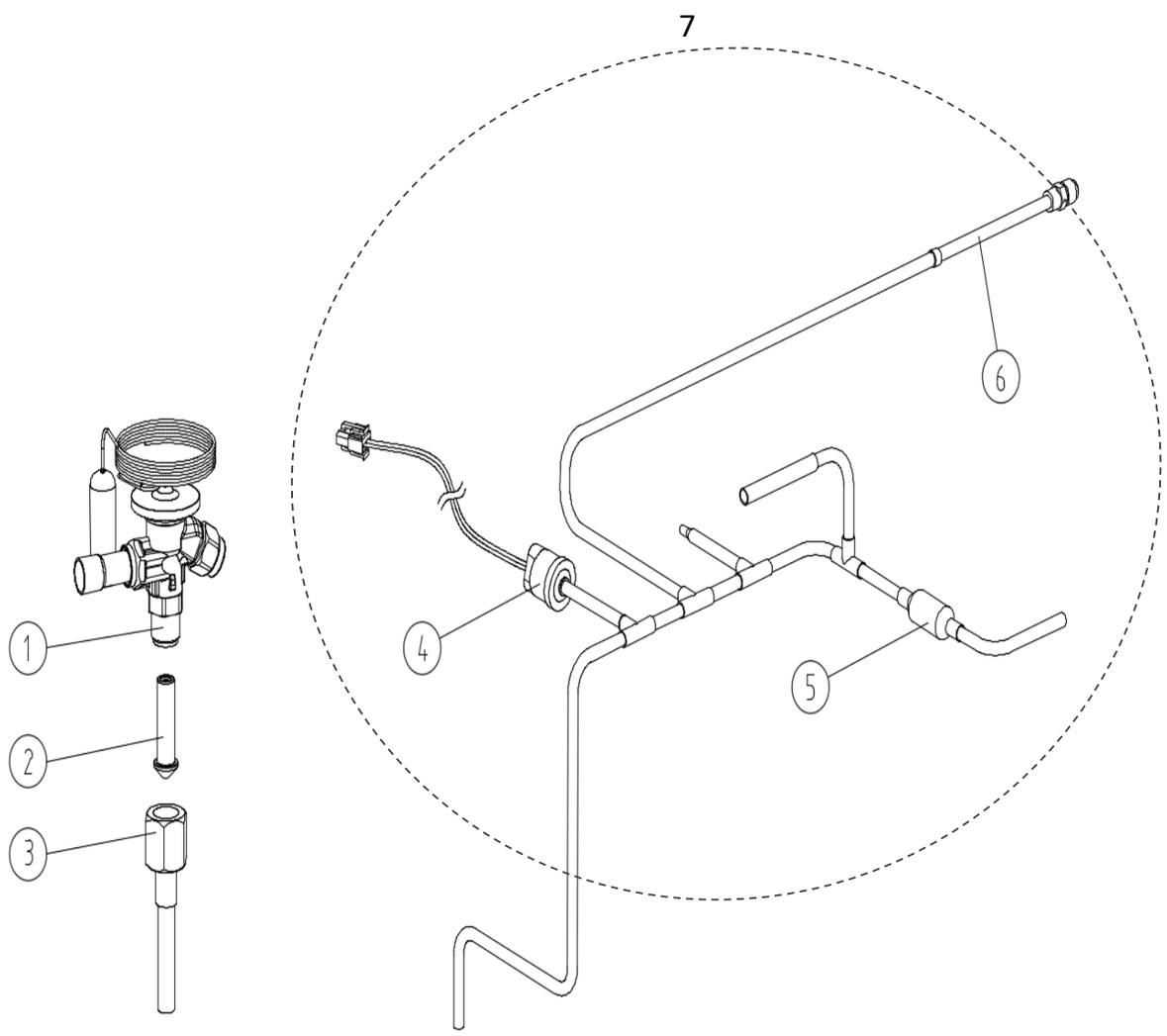

NO	ITEMS	* CODE
1	EXPANSION VALVE	340007400
2	ADAPTER	N/A
3	ADAPTER	N/A
3-1	JOINT PIPE-EXP 1/4"	325144700
4	ASSY HIGH PRESSURE S/W	429006900
5	STRAINER HOTGAS	605001300
6	CHARGE NIPPLE ASSY	459000400
7	DISCHARGE PIPE ASSY	325110900

* Manufactured before January 2018

NO	ITEMS	** CODE
1	EXPANSION VALVE	340029000

** Manufactured after January 2018

Revised 06/25/2020

WM-0460-AC/AH-22

[REFRIGERATION CIRCUIT ASSY]

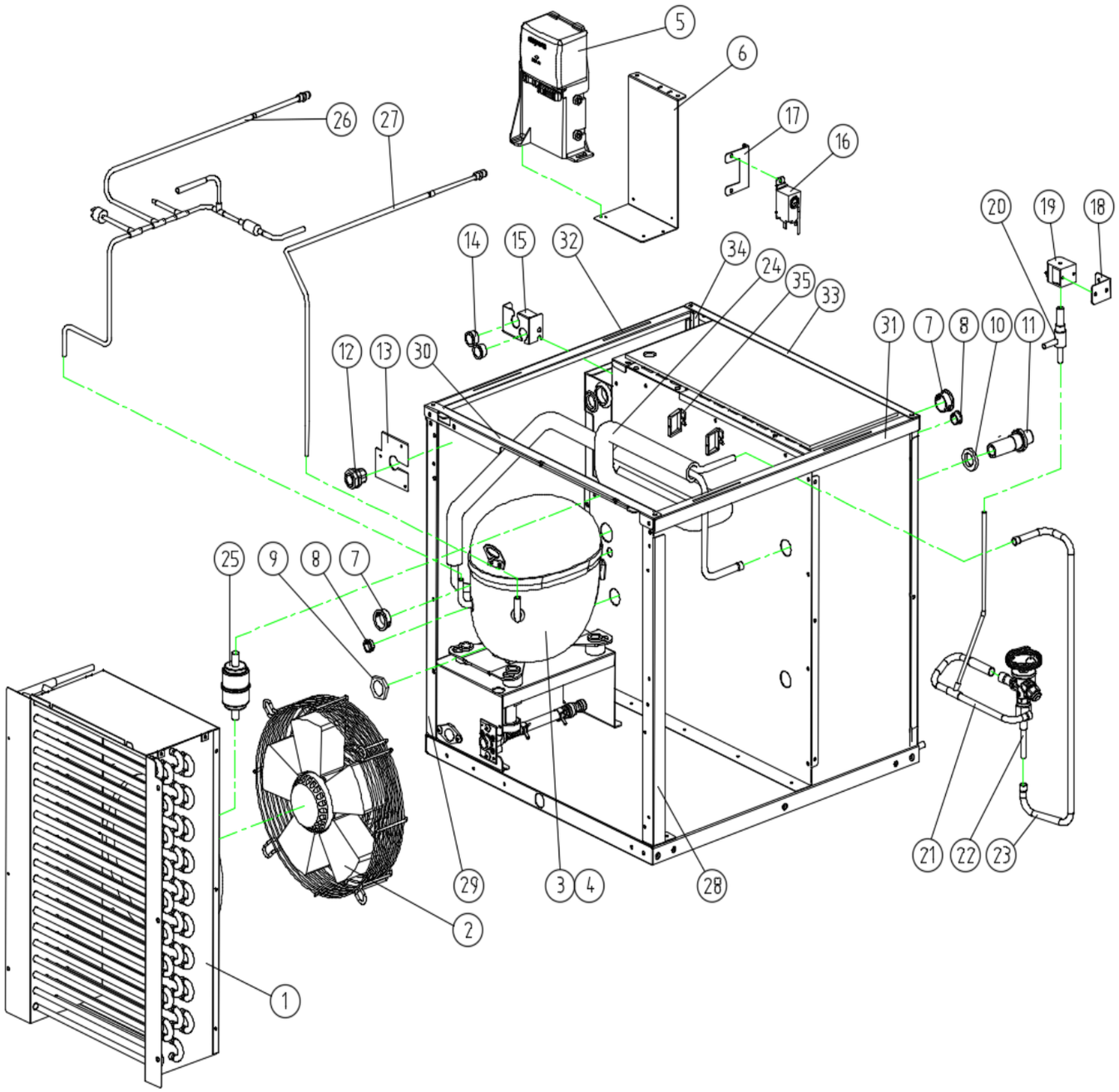

NO	ITEMS	* CODE
1	CONDENSER ASSY	411022000
2	ASSY FAN MOTOR W/ HARNESS	737000700
3	COMPRESSOR	394018500
4	OLP	658007000
5	STARTER KIT	426054300
6	BRACKET CAPACITOR	301030801
7	GROMMET BUSHING ø28 * 2EA	232003500
8	GROMMET BUSHING ø12.7 * 2EA	232003800
9	VESSEL NUT	215007500
10	PACKING NIPPLE	303005501
11	BOLT VESSEL IN/OUT	214015500
12	CABLE GLAND(115V/60HZ)	227001100
13	POWER CORD BRACKET	301131400
14	GROMMET BUSHING * 2EA	232003600
15	BRACKET CHARGE NIPPLE	317157100
16	PRESSURE S/W	355018500
17	BRACKET THERMOSTAT	301102200
18	SOLENOID VALVE BKT	317155200
19	ASSY SOLENOID VALVE COIL	429005900
20	SOLENOID VALVE BOD	340026800
21	HOT GAS PIPE ASSY	325109900
22	SOLDER ADAPTER	215017800
23	EXP VALVE IN PIPE	325110000
24	HEAT EXCHANGE PIPE ASSY	433028500
25	FILTER DRYER	372001300
26	DISCHARGE PIPE ASSY	325110900
27	CHARGE PIPE * 2EA	325108900
28	FRAME BACK LEFT	350008500
29	FRAME BACK RIGHT	350009600
30	FRAME BACK	350009100
31	FRAME TOP LEFT	350008400
32	FRAME TOP RIGHT	350008300
33	FRAME FRONT TOP ASSY	350009500
34	FRAME FRONT RIGHT	350008900
35	WIRE SADDLE * 3EA	209000700

* Manufactured before January 2018

NO	ITEMS	** CODE
1	CONDENSER ASSY	411030300