Revised 06/25/2020

WM-0460-AC/AH

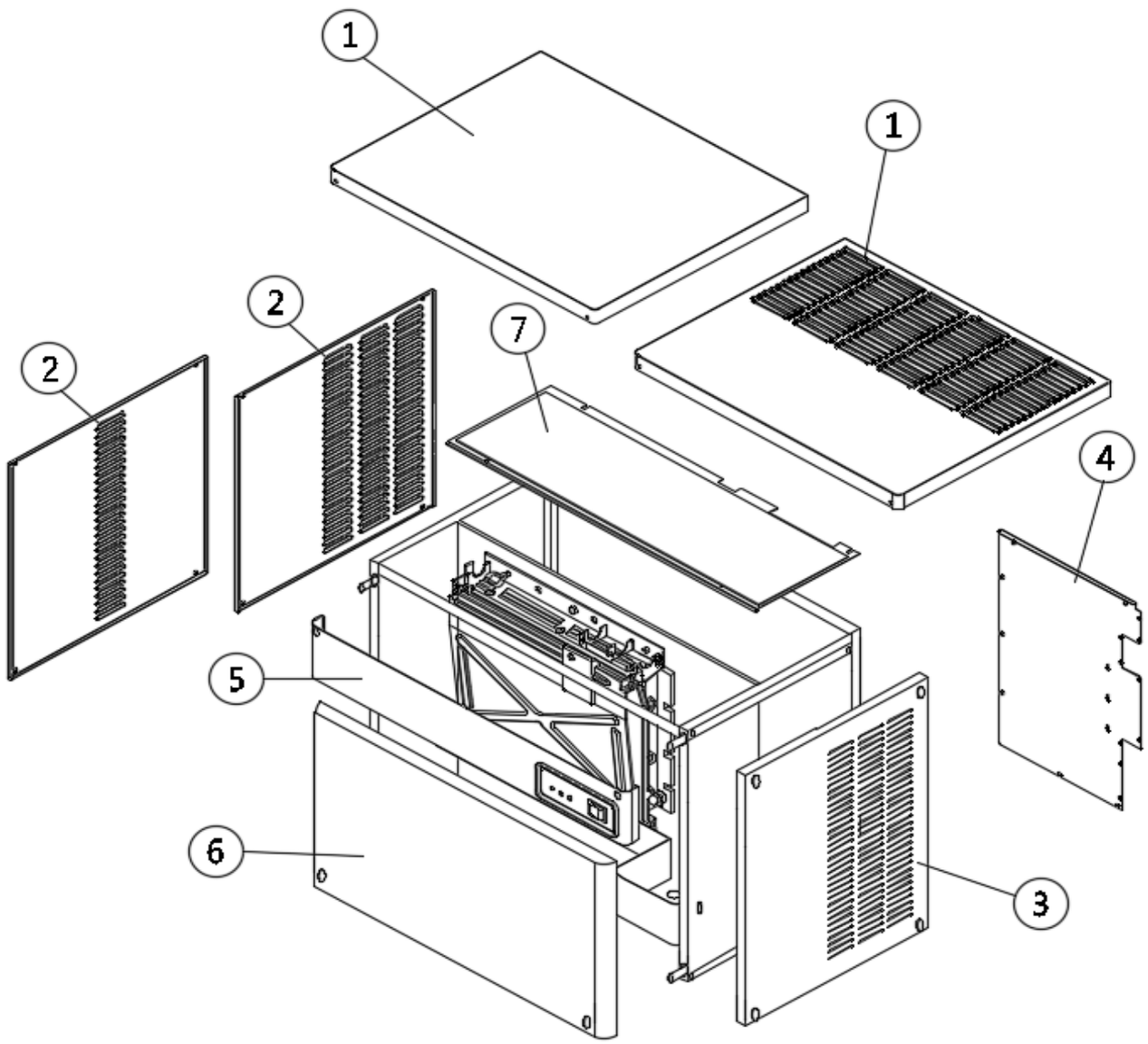

* Manufactured before January 2018			** Manufactured after January 2018		
NO	ITEMS	* CODE	NO	ITEMS	** CODE
1	TOP COVER(ABS)	317100400	1	TOP COVER(STS)	317195700
2	SIDE PANEL L	349012903	2	SIDE PANEL L	349012910
3	SIDE PANEL R	349013003			
4	BACK PANEL	349084300	4	BACK PANEL	349097700
5	FRONT UPPER COVER ASSY	432030500			
6	FRONT COVER DOWN ASSY	432019211			
7	ASSY EVA COVER	427011400			

Revised 06/25/2020

WM-0460-AC/AH

[FRONT UPPER COVER ASSY]

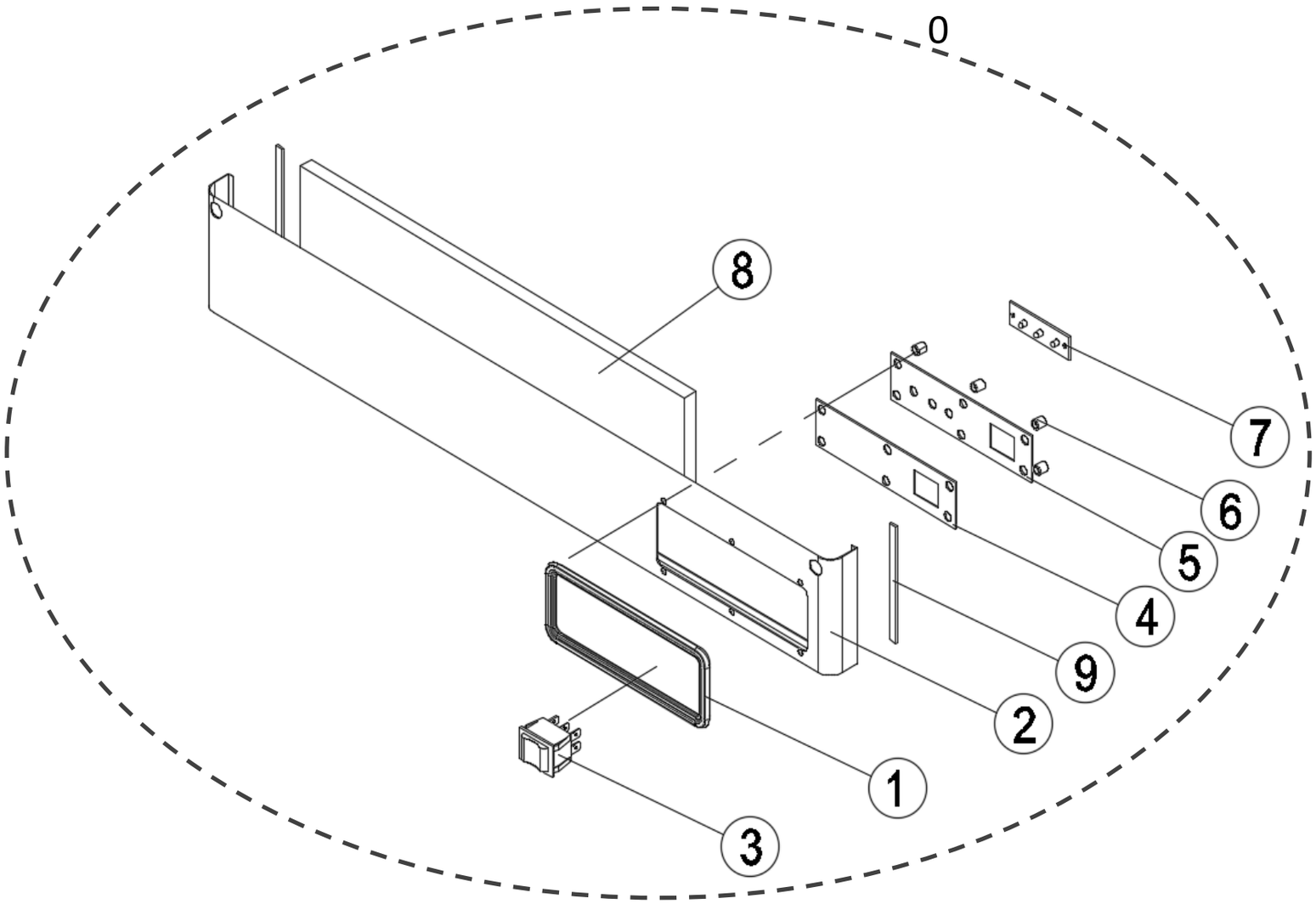

NO	ITEMS	CODE
0	FRONT UPPER COVER ASSY	432030500
1	BUTTON FRAME	440009604
2	FRONT TOP COVER	317093700
3	3L S/W MAIN(6P,15A,250VAC)	355007100
4	FRONT DISPLAY	440028600
5	BRACKET PCB	301062600
6	SUPPORT PCB * 6EA	314011700
6-1	SCREW(FH,M3,14, MFZN) * 6EA	210811400
7	DISPLAY PCB ASSY	415001200
8	SPONGE FRONT TOP	306020000
9	SPONGE SIDE TOP	306019900

Revised 06/25/2020

WM-0460-AC/AH

[FRONT LOWER COVER ASSY]

NO	ITEMS	CODE
1	FRONT COVER DOWN ASSY	432019211
2	WATER GUIDE	317170110

Revised 09/18/2020

WM-0460-AC/AH

[CONTROL BOX]

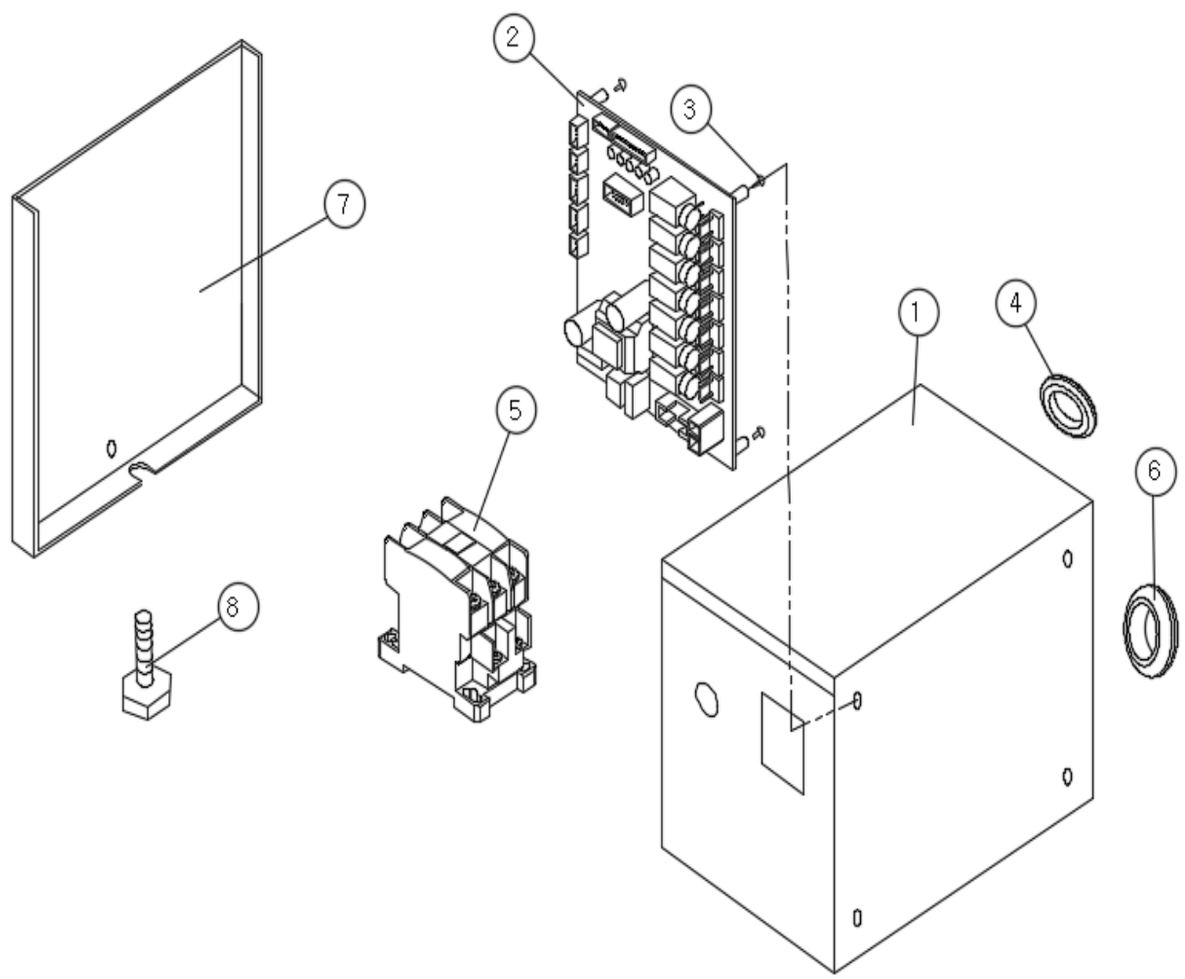

NO	ITEMS	CODE
1	CONTROL BOX	N/A
2	MAIN BOARD (V7.0)	415008807
3	SCREW(PH,M3*6) * 4EA	AAAA01010
4	BUSHING * 2EA	232000500
5	MAGNETIC CONTACTOR	322002200
6	BUSHING	232000400
7	CONTROL BOX COVER	301087701
8	HAND SCREW * 3EA	210804501

Revised 06/25/2020

WM-0460-AC/AH

[WATER IN/OUT ASSY]

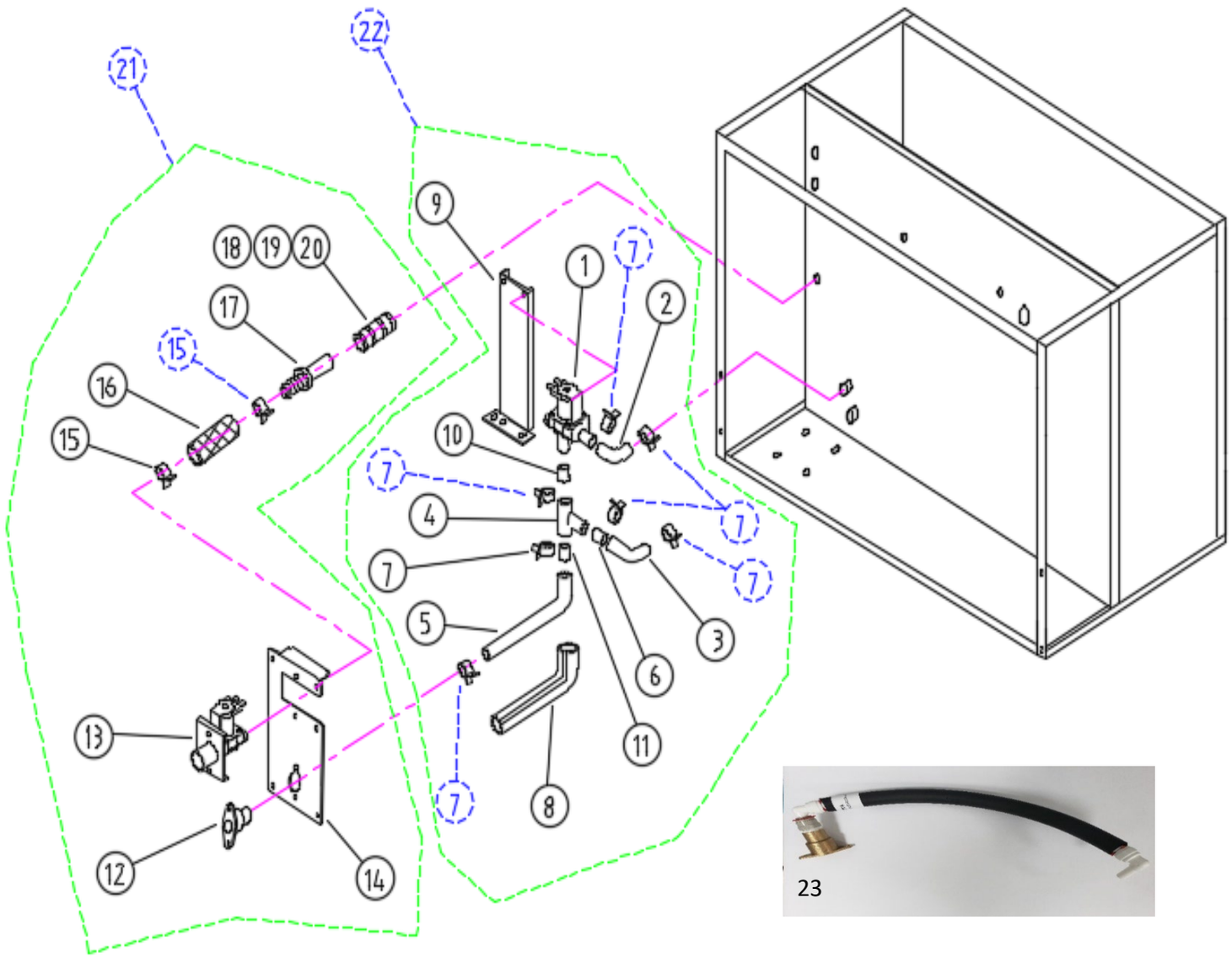

NO	ITEMS	CODE
1	WATER DUMP VALVE	340026600
2	ELBOW HOSE	229026900
3	ELBOW HOSE	229012300
4	HOSE (T)	229011100
5	HOSE PUMP OUT	229012100
6	PIPE	325011400
7	BAND SPRING 23 * 7EA	203002200
8	FOAM PE (PUMP MOTOR IN/OUT)	306026800
9	BRACKET DRAIN VALVE	301118100
10	HOSE-PVC (DRAIN)	229009900
11	PIPE	325011400
12	SOCKET (3/4" NPT)	215013400
13	WATER INLET VALVE	340027500
14	BRACKET SOCKET	301131200
15	BAND SPRING 15	203003800
16	BRAIDED SILICONE HOSE	229027800
17	TUBE TO HOSE STEM	398014200
18	REDUCING STRAIGHT CONNECTOR	398014100
19	LOCKING CLIP 3/8"	224002000
20	LOCKING CLIP 1/4"	224002200
21	SUB WATER IN/OUT(SOCKET)	417017000
22	SUB DRAIN VALVE	417016700
23	WATER INLET HOSE ASSY	469002820

Revised 06/25/2020

WM-0460-AC/AH

[EVAPORATOR PLATING ASSY]

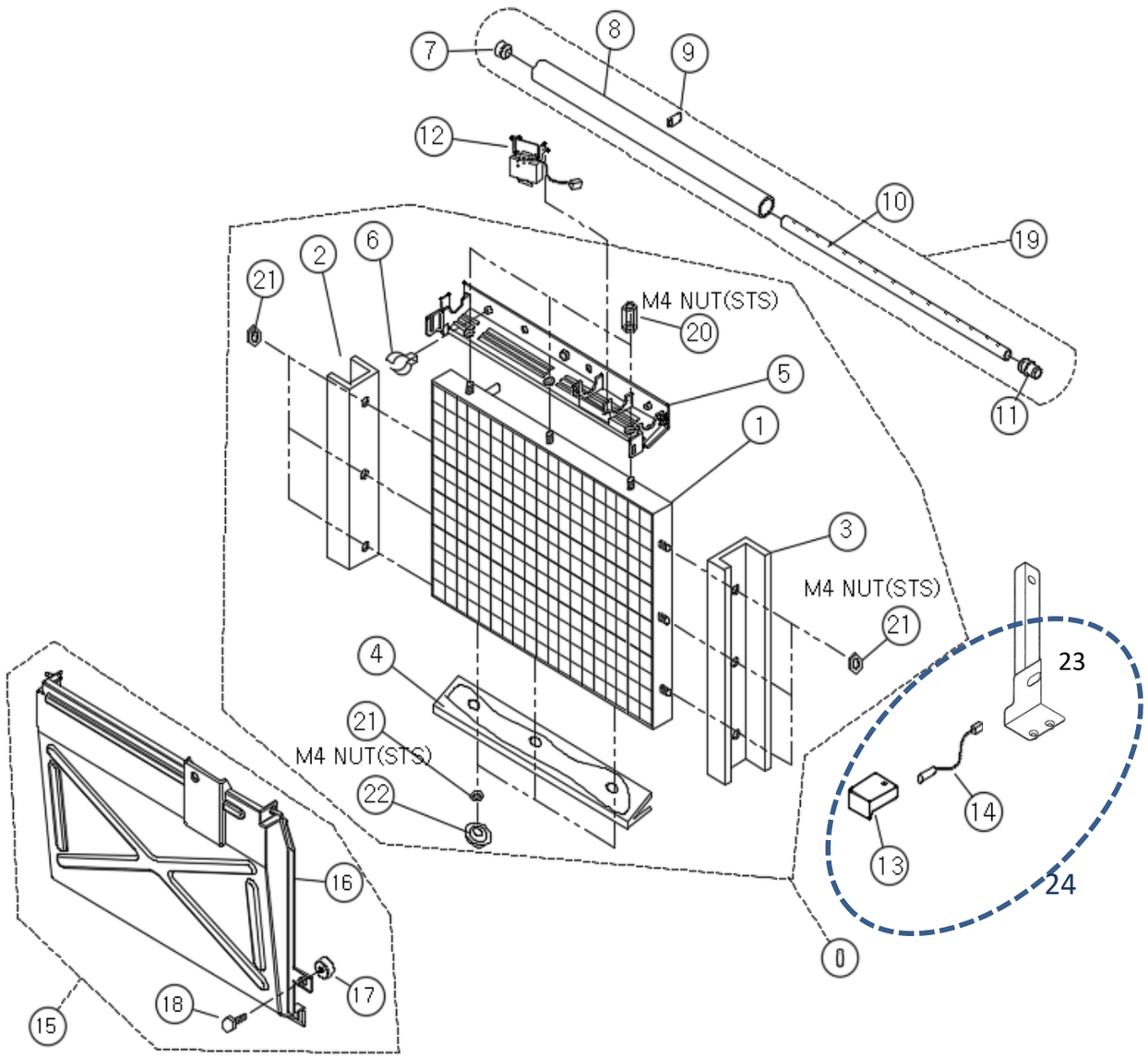

NO	ITEMS	* CODE
0	ASSY EVAPORATOR-C	409043100
	ASSY EVAPORATOR-H	409043110
1	EVAPORATOR-C	N/A
	EVAPORATOR-H	N/A
2	EVAP FRAME L	339006310
3	EVAP FRAME R	339006410
4	EVA FRAME DOWN	339003200
5	EVAP FRAME TOP ASSY	447011000
6	FL CLIP(PC)	224002300
7	LEFT PIPE CAP	319004301
8	DISTRIBUDER PIPE	325026201
9	BUSHING	310004301
10	INNER DISTRIBUDER PIPE	325026300
11	RIGHT PIPE CAP	319006500
12	ASSY TOP SENSOR ICE	427025300
24	MAGNET SENSOR & BRACKET KIT	K31002000
13	HOUSING	N/A
14	SENSOR	701002000
17	MAGNET	322005600
23	BRACKET	N/A
15	ASSY WATER CURTAIN	468011300
16	WATER CURTAIN	635001801
18	HAND SCREW	210804501
19	ASSY BUDER	426056700
20	HEX NUT(M4xL18) * 3EA	215018000
21	NUT HEX(M4) * 9EA	C00B02000
22	CAP SILICON * 3EA	319004200

* Manufactured before January 2018

NO	ITEMS	** CODE
0	ASSY EVAPORATOR-C	409041100
	ASSY EVAPORATOR-H	409041110
1	EVAPORATOR-C	N/A
	EVAPORATOR-H	N/A
12	ASSY TOP SENSOR ICE	427025900
24	MAGNET SENSOR KIT	K31002000
13	HOUSING	N/A
14	SENSOR	701002000
17	MAGNET	322005600
23	BRACKET	N/A

** Manufactured after January 2018

Revised 06/25/2020

WM-0460-AC/AH

[WATER TROUGH ASSY]

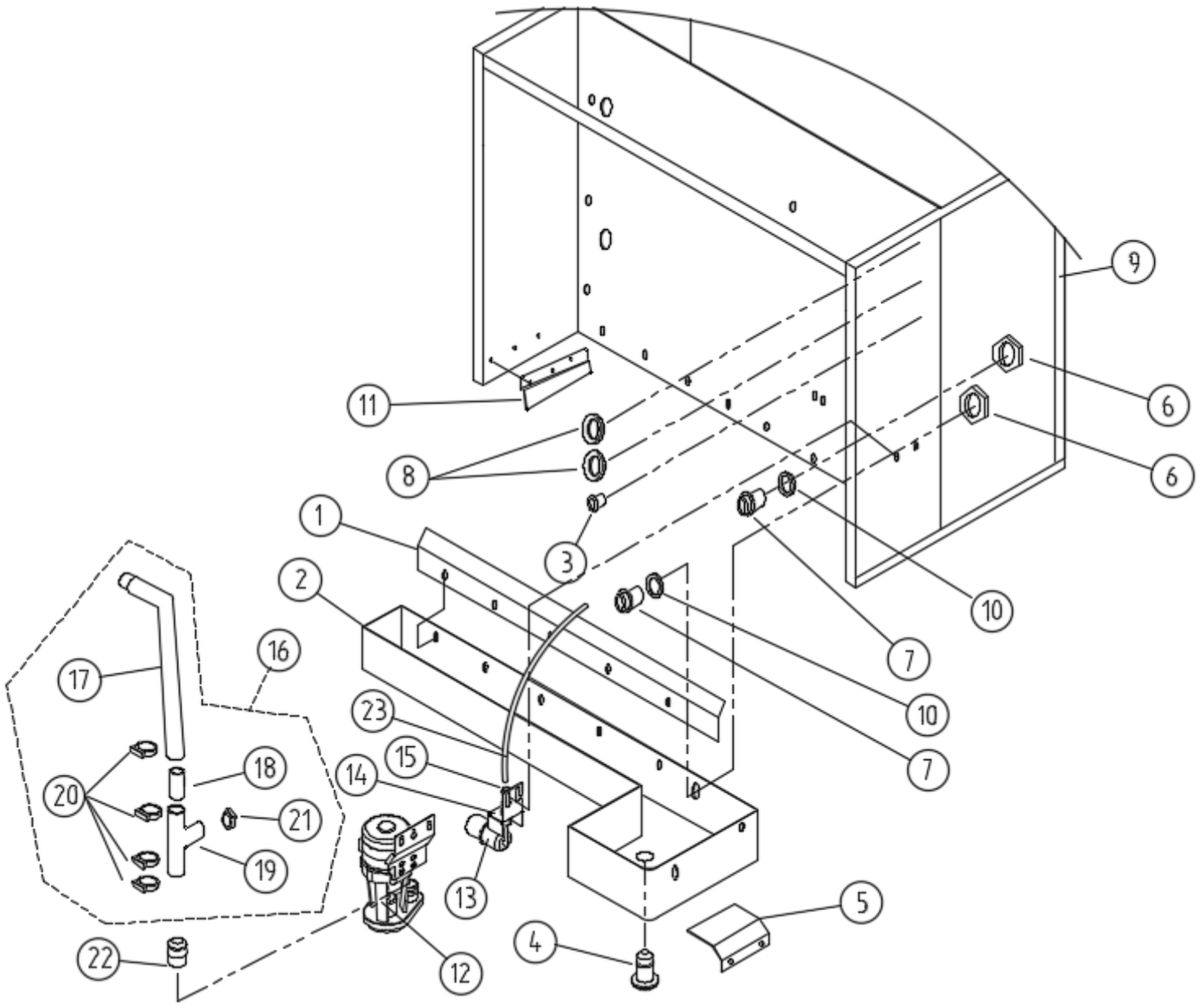

NO	ITEMS	CODE
1	WATER TROUGH GUIDE	301036600
2	WATER TROUGH	604001700
3	GROMMET BUSHING	232003800
4	PLUG	303022000
5	SUPPORT VESSEL-R	320007410
6	VESSEL NUT * 2EA	215007500
7	STRAINER VESSEL BOLT * 2EA	214011900
8	BUSHING * 2EA	232000500
9	ASSY FRAME	416010800
	ASSY FRAME (DOE)	416010830
10	PACKING * 2EA	303005501
11	WATER BLOCK	317176910
12	WATER PUMP	406012800
12-1	PUMP MOTOR	353021001
12-2	PUMP MOTOR BRACKET	341014100
13	FLOAT ASSY	470001100
14	BRACKET FLOAT	341014000
15	EQUAL STRAIGHT(1/4", PI0408S)	398012200
16	ASSY PUMP HOSE SUB	468016100
17	WATER PUMP OUT HOSE-CUT	229013110
18	PIPE	325088000
19	HOSE T	229026500
20	CLAMP HOSE * 4EA	229026600
21	CLAMP HOSE	229008100
22	RIGHT PIPE CAP	319006500
23	PE TUBE(OD 1/4")	229013600

Revised 06/25/2020

WM-0460-AC/AH

[REFRIGERATION PART]

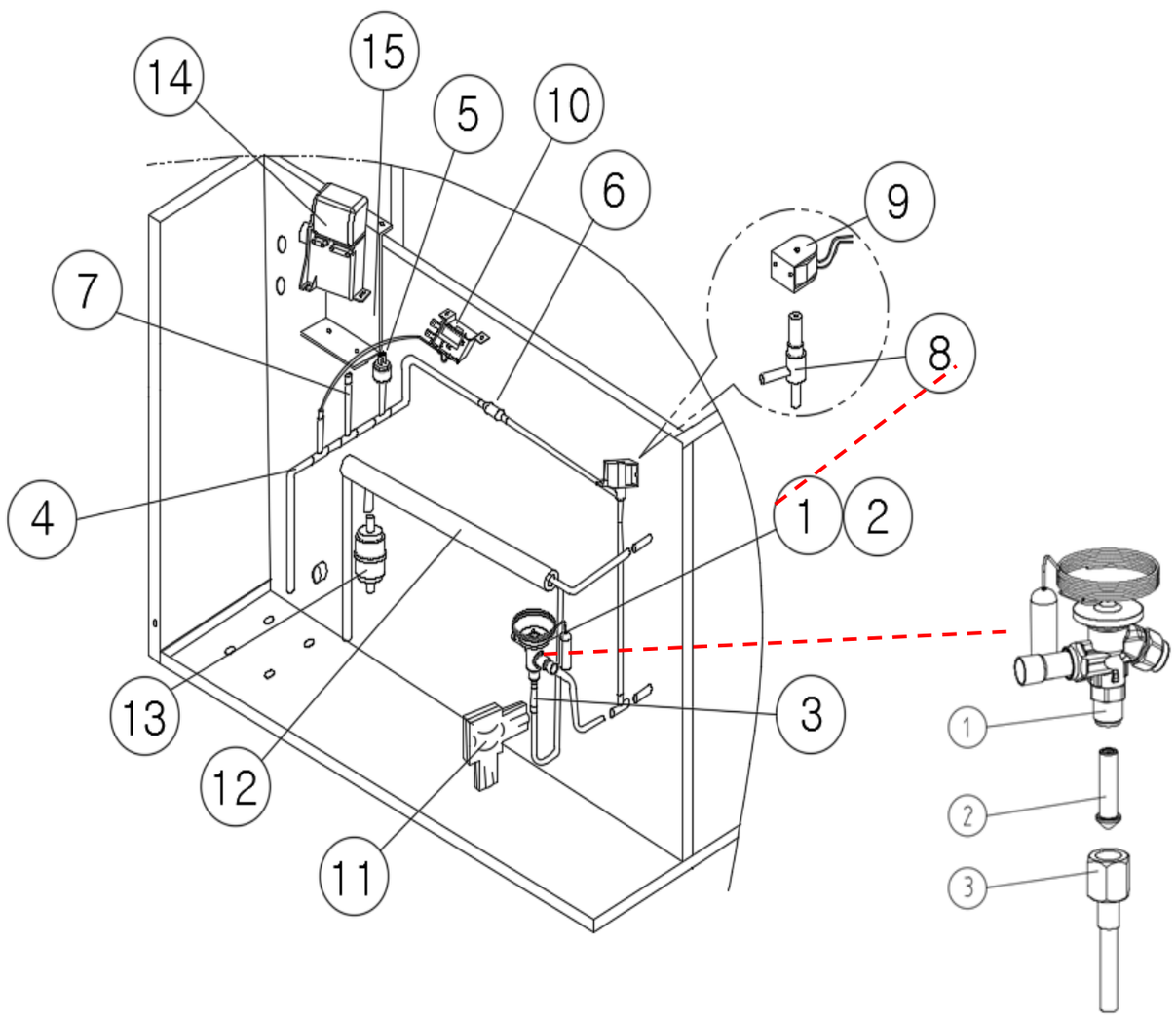

NO	ITEMS	* CODE
1	EXPANSION VALVE	340029000
2	Integral type	N/A
3	Integral type	N/A
3-1	JOINT PIPE-EXP 3/8"	325144600
4	ASSY DISCHARGE PIPE	433029000
5	ASSY HIGH PRESSURE S/W	429006900
6	STRAINER HOTGAS	605001300
7	CHARGE NIPPLE ASSY-100	459000400
8	SOLENOID VALVE BODY	340026800
9	SOLENOID VALVE COIL	429005900
10	PRESSURE SWITCH	355018500
11	FOAM PE (EXPANSION)	306016700
12-1	ASSY HOT GAS PIPE	325110100
12-2	HEAT EXCHANGE PIPE ASSY	433029100
13	FILTER DRYER	372001300
14	ASSY CSR BOX	426054300
14-1	START-RELAY	357015000
14-2	START CAPACITOR	659010600
14-3	RUN-CAPACITOR	659010700
15	BRACKET-CSR BOX	301130800

* Manufactured before January 2018

NO	ITEMS	** CODE
1	EXPANSION VALVE	340029000
2	Integral type	N/A
3	Integral type	N/A
4	DISCHARGE PIPE ASSY	433043800
5	ASSY HIGH PRESSURE S/W	429003900
6	STRAINER	605001900
8	SOLENOID VALVE BODY	340028200
9	SOLENOID VALVE COIL	429008100
12-1	HOT GAS PIPE ASSY	325141900
12-2	HEAT EXCHANGE PIPE ASSY	433029101

** Manufactured after January 2018

Revised 09/18/2020

WM-0460-AC/AH

[REFRIGERATION CIRCUIT ASSY]

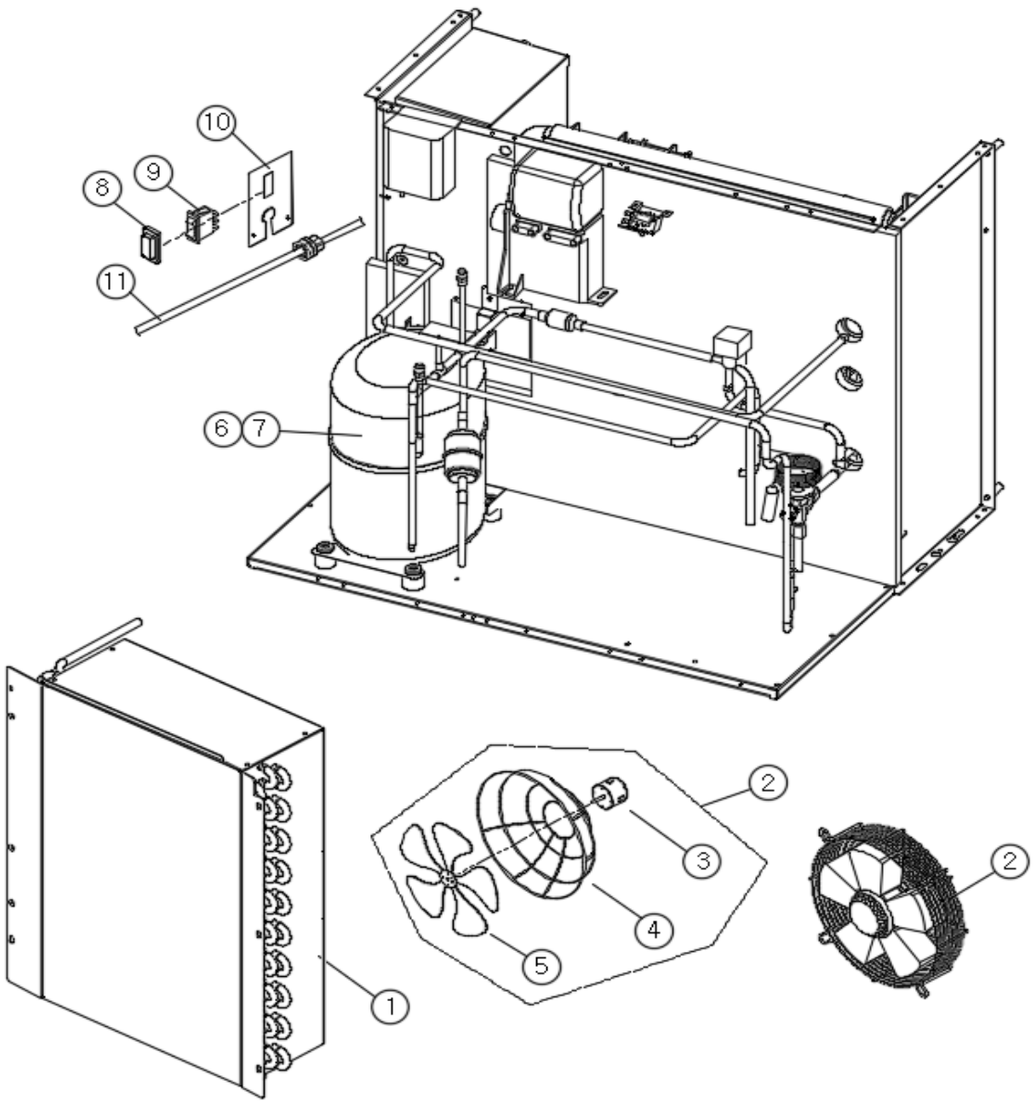

* Manufactured before January 2018			** Manufactured after January 2018		
NO	ITEMS	* CODE	NO	ITEMS	** CODE
1	CONDENSER ASSY-0460	411021900	1	CONDENSER ASSY	411030700
2	ASSY FAN MOTOR SUB	N/A	2	FAN ASSY	737000700
3	FAN MOTOR	353030000			
4	FAN NET	308001200			
5	FAN(Φ300,4LIP)	308001800			
6	COMPRESSOR	394018500			
7	OLP	658007000			
7-1	STARTER KIT	426054300			
8	COVER S/W	355008900			
9	S/W 2L (DRAIN)	355009100			
10	BRACKET CORD & SWITCH	301118200			
11	ASSY POWER CORD	722008600			