FRIFRI SILOFRIT ELECTRIC COUNTER-TOP CHIP SCUTTLE - W 400 MM - 1.0 KW

MODEL: 650722

AIA FILE NUMBER:

ITEM NUMBER:



UKKeep chips and other fried food piping hot and in optimum condition with the FriFri Silofrit Counter Top Chip Scuttle. Food is heated both from above via an infra-red lamp, and below via the drain plate. Designed to be durable, the scuttle is made from 304 grade stainless steel and has a removable gastronorm and drain plate for easy cleaning.

PRODUCT FEATURES

- Crisp, delicious, piping hot fries every time
- Fries are kept piping hot and crispy by the infrared lamp above, as well as the drain plate with attached element beneath
- For added convenience the removable gastronorm and drain plate can be cleaned in the dishwasher
- Manufactured in durable 304 grade stainless steel

FRIFRI SILOFRIT ELECTRIC COUNTER-TOP CHIP SCUTTLE - W 400 MM - 1.0 KW

MODEL: 650722

WEIGHTS & DIMENSIONS

Product Width	400 mm
Product Depth	620 mm
Product Height	540 mm
Product Dimensions (WxDxH) (mm)	400 Millimeter X 620 Millimeter X 540 Millimeter

SHIPPING DETAILS

Ship Width	73 cm
Ship Depth	54 cm
Ship Height	63 cm
Ship Weight	22.4 kg
Ship Method	Small Parcel (Ups Fedex Dhl)
Shipping Package Type	Pieces

PRODUCT CERTIFICATION ICONS

Made in UK UKCA IP25

ENERGY SPECIFICATIONS

Primary Energy Type	Electric
Electrical Volts	230V

bidding specifications

FriFri reserves the right to modify specifications or discontinue models without incurring obligation. Dimensions nominal.

Document Auto-Generated

FRIFRI SILOFRIT ELECTRIC COUNTER-TOP CHIP SCUTTLE - W 400 MM - 1.0 KW

MODEL: 650722

TECHNICAL DRAWING

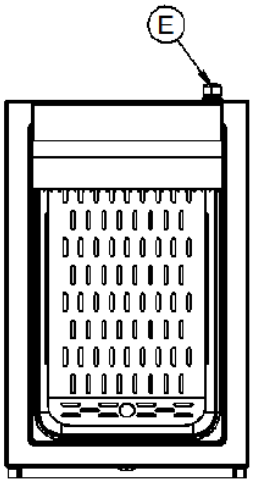

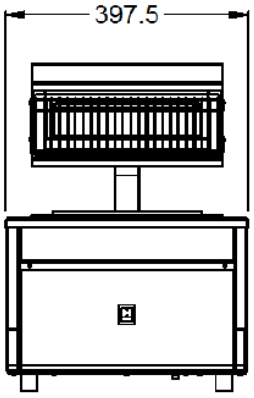

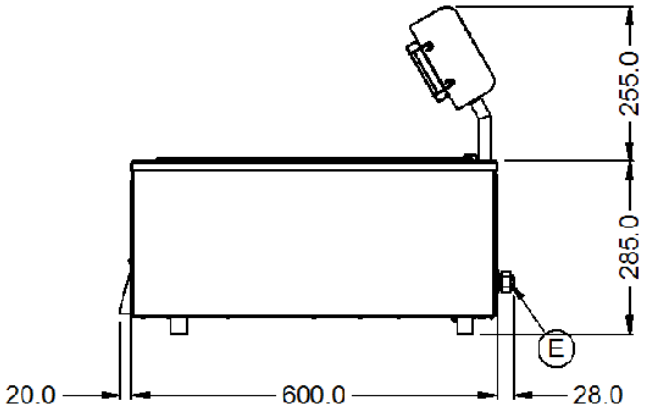

FriFri reserves the right to modify specifications or discontinue models without incurring obligation. Dimensions nominal.

Document Auto-Generated