FRIFRI PROFI 10 ELECTRIC COUNTER-TOP SINGLE TANK FRYER - 2 BASKETS - W 540 MM - 6.9 KW

MODEL: 651068

AIA FILE NUMBER:

ITEM NUMBER:



UKFry delicious food precisely with the powerful FriFri 6.9kW Profi+ 10 Counter Top Fryer. Sturdy and safe, the fryer's stainless steel tank has the capacity to produce 20kg of perfectly fried chips per hour, while there's also a rear-mounted slot-in lid that also acts as a splashback and basket support. The Profi+ 10 boasts the kind of quality that customers have come to expect from the FriFri brand for over 70 years.

PRODUCT OPTIONS AND ACCESSORIES

- FZ300716 BASKET FOR PROFI/FRITA+ 6/10 AND PROFI+ 10 - WITHOUT HANDLE

PRODUCT FEATURES

- A powerful counter top fryer capable of producing 20 Kg of chips per hour
- Highly responsive digital electronic control able to maintain oil to +/-1 °C of the temperature selected
- Enhanced operator safety with front mounted control panel
- Rear mounted slot in lid that also acts as a splashback and basket support
- Safe and easy to use front valve for draining off used oil
- One piece pressed stainless steel tank with rounded corners for increased durability and reduced cleaning times

FRIFRI PROFI 10 ELECTRIC COUNTER-TOP SINGLE TANK FRYER - 2 BASKETS - W 540 MM - 6.9 KW

MODEL: 651068

WEIGHTS & DIMENSIONS

Product Width	720 mm
Product Depth	475 mm
Product Height	455 mm
Product Dimensions (WxDxH) (mm)	720 Millimeter X 475 Millimeter X 455 Millimeter

SHIPPING DETAILS

Ship Width	74 cm
Ship Depth	54 cm
Ship Height	36 cm
Ship Weight	30.8 kg
Ship Method	Small Parcel (Ups Fedex Dhl)
Shipping Package Type	Pieces

PRODUCT CERTIFICATION ICONS

Made in UK UKCA IP25

ENERGY SPECIFICATIONS

Primary Energy Type	Electric
Electrical Volts	400V

ADDITIONAL TECHNICAL SPECIFICATIONS

Basket Lift Type	Not Applicable
Food Production Rate	20kg fries - 7mm [frozen]
Temperature Maximum	190 °C
Total Oil Capacity (volume)	30 l
Vat 1 Oil Capacity (volume)	30 l

bidding specifications

FriFri reserves the right to modify specifications or discontinue models without incurring obligation. Dimensions nominal.

Document Auto-Generated

FRIFRI PROFI 10 ELECTRIC COUNTER-TOP SINGLE TANK FRYER - 2 BASKETS - W 540 MM - 6.9 KW

MODEL: 651068

TECHNICAL DRAWING

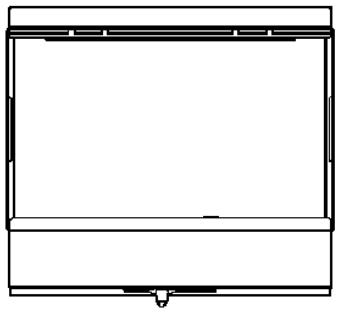

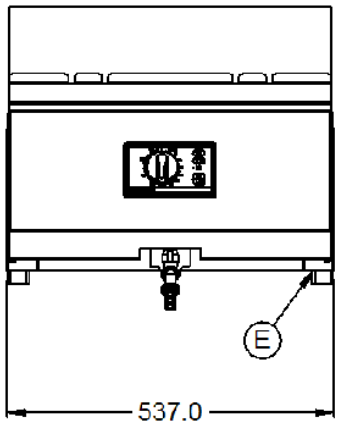

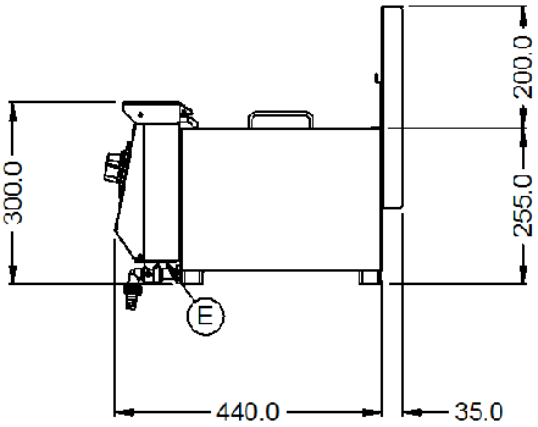

FriFri reserves the right to modify specifications or discontinue models without incurring obligation. Dimensions nominal.

Document Auto-Generated