IMC OPTIMUM BARTENDER GLASS FRESHNER SINK UNIT WITH DOOR - 400MM

MODEL: BT400GFSD

AIA FILE NUMBER:

ITEM NUMBER:



UKThe Optimum Bartender Glass Freshener Sink Unit with Door – 400mm combines a built-in glass freshener system, integrated sink and practical storage in one compact unit, helping bartenders work faster and more efficiently. Designed for busy pubs, bars, hotels and restaurants, it rinses glasses to remove residue, improve presentation and enhance drink quality. The integrated sink supports quick cleaning during service, while the cupboard below keeps essential supplies organised and close at hand. Manufactured from durable stainless steel, this hygienic, easy-to-clean unit integrates seamlessly with the Optimum Underbar System to create a professional, efficient bar workspace.

OPTIMUM By Bartender

PRODUCT OPTIONS AND ACCESSORIES

- BT3020GCBGreen Chopping Block for Glass Freshener Unit

PRODUCT FEATURES

- Manufactured with a 304 grade stainless steel top for superior corrosion resistance and hygiene, and a robust 430 grade stainless steel body for strength and durability in demanding bar environments.
- Standardised 800mm height and 505mm depth create a seamless, ergonomic workspace that enhances operator comfort, improves efficiency and delivers a consistent, professional bar appearance.
- Built-in glass freshener system rinses glasses before serving to remove residue and improve drink presentation.
- Integrated sink provides a convenient washing and rinsing point, helping maintain hygiene during busy service.
- Enclosed cupboard with door keeps cleaning products and bar essentials neatly stored and close at hand.
- Dedicated glass preparation station reduces unnecessary movement behind the bar, improving workflow and service speed.
- Seamless Optimum Underbar System integration creates a coordinated, professional bar layout that enhances operational efficiency.
- Two Year Parts and Labour Warranty

IMC OPTIMUM BARTENDER GLASS FRESHNER SINK UNIT WITH DOOR - 400MM

MODEL: BT400GFSD

WEIGHTS & DIMENSIONS

Product Width	400 mm
Product Width (nominal)	400 mm
Product Depth	505 mm
Product Height	800 mm
Product Dimensions (WxDxH) (mm)	400 Millimeter X 505 Millimeter X 800 Millimeter

WATER, PLUMBING, AND DRAINAGE SPECIFICATIONS

Water Inlet Size	0.75 in

PRODUCT CERTIFICATION ICONS

CE

bidding specifications

IMC reserves the right to modify specifications or discontinue models without incurring obligation. Dimensions nominal.

Document Auto-Generated

IMC OPTIMUM BARTENDER GLASS FRESHNER SINK UNIT WITH DOOR - 400MM

MODEL: BT400GFSD

TECHNICAL DRAWING

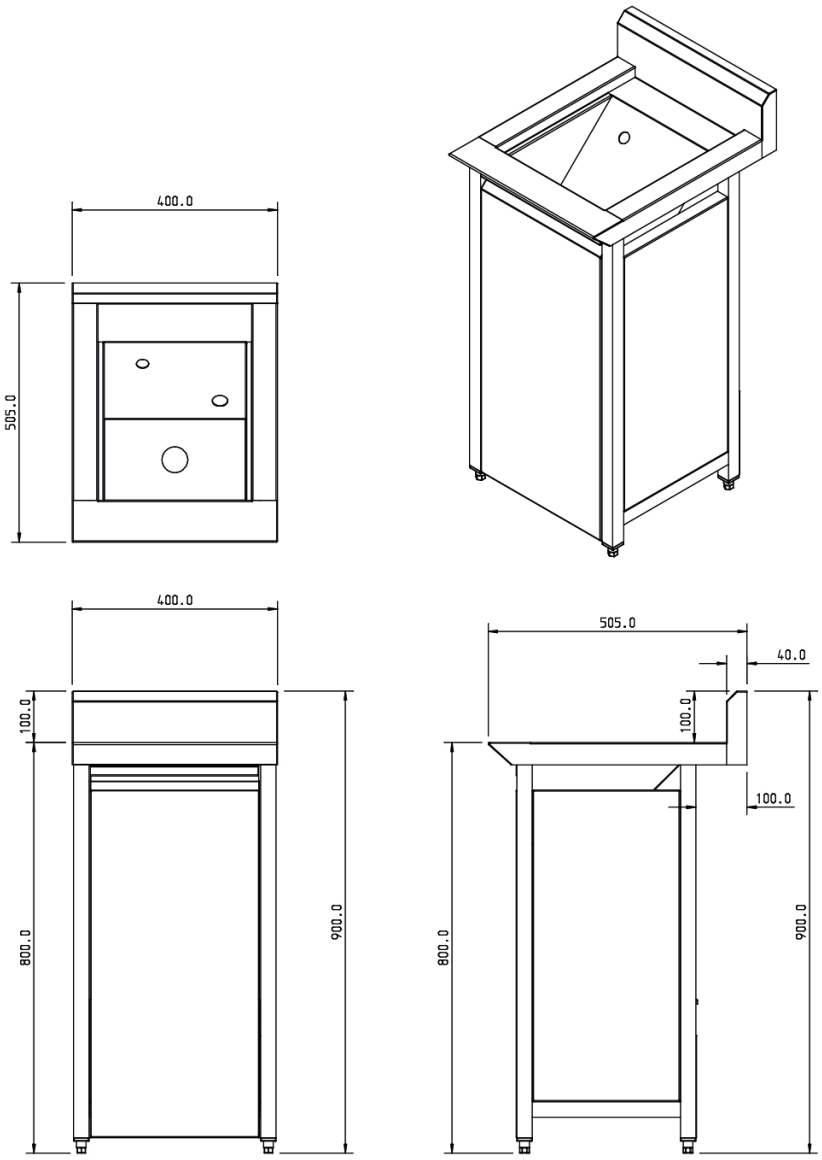

IMC reserves the right to modify specifications or discontinue models without incurring obligation. Dimensions nominal.

Document Auto-Generated