IMC OPTIMUM BARTENDER PERFORATED TOP WITH VOID FOR BOTTLE SKIP - 800MM

MODEL: BT800PT



OPTIMUM By Bartender

UKThe Optimum Bartender Perforated Top with Void for Bottle Skip – 800mm is designed to improve bar efficiency with an integrated bottle skip void, allowing empty bottles to be discarded directly into an undercounter bottle skip for faster service and a clutter-free workspace. The perforated top provides a durable, practical surface for busy drink preparation areas. Constructed with a hygienic 304 grade stainless steel worktop and a robust 430 grade stainless steel body, it is built for demanding commercial environments. Its 800mm height and 505mm depth ensure seamless integration with other Optimum Bartender stations, creating a professional, ergonomic workspace. Supplied with a One Year Parts and Labour Warranty.

PRODUCT FEATURES

- Integrated bottle skip void enables empty bottles to be cleared away instantly, speeding up service, minimising clutter and improving workflow behind the bar.
- Manufactured with a 304 grade stainless steel top for superior corrosion resistance and hygiene, and a robust 430 grade stainless steel body for strength and durability in demanding bar environments.
- Standardised 800mm height and 505mm depth create a seamless, ergonomic workspace that enhances operator comfort, improves efficiency and delivers a consistent, professional bar appearance.
- Solid work surface provides a practical area for drink preparation and service tasks.
- Smooth, professional finish complements modern bars, pubs, restaurants and hotels.
- Two Year Parts and Labour Warranty

AIA FILE NUMBER:

ITEM NUMBER:

IMC OPTIMUM BARTENDER PERFORATED TOP WITH VOID FOR BOTTLE SKIP - 800MM

MODEL: BT800PT

WEIGHTS & DIMENSIONS

Product Width	800 mm
Product Width (nominal)	800 mm
Product Depth	505 mm
Product Height	800 mm
Product Dimensions (WxDxH) (mm)	800 Millimeter X 505 Millimeter X 800 Millimeter

PRODUCT CERTIFICATION ICONS

CE

bidding specifications

IMC reserves the right to modify specifications or discontinue models without incurring obligation. Dimensions nominal.

www.lincat.co.uk/brands/imc | p: +44 1522 875500 Whisby Road, Lincoln, LN6 3QZ, UK

IMC OPTIMUM BARTENDER PERFORATED TOP WITH VOID FOR BOTTLE SKIP - 800MM

MODEL: BT800PT

TECHNICAL DRAWING

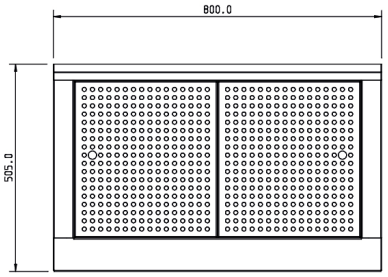

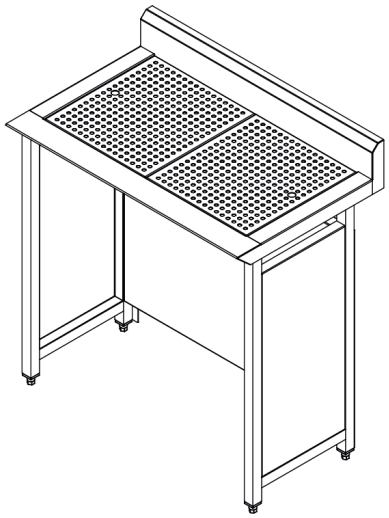

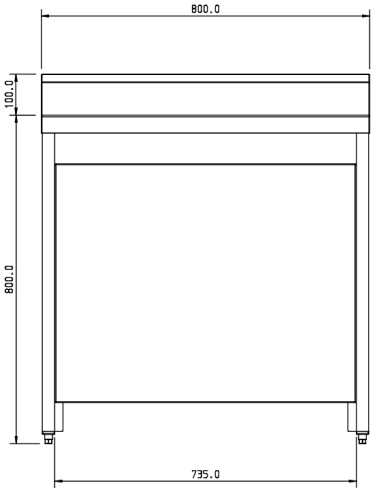

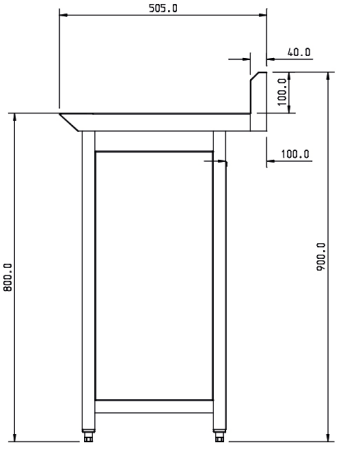

IMC reserves the right to modify specifications or discontinue models without incurring obligation. Dimensions nominal.

Document Auto-Generated