IMC OPTIMUM BARTENDER ICE WELL - 850MM

MODEL: BT850ICE

AIA FILE NUMBER:

ITEM NUMBER:



OPTIMUM
By Bartender

UKThe Optimum Ice Well provides efficient and organised ice storage for busy commercial bars. Measuring 850mm wide with four separate ice wells, it allows easy separation of ice types and ensures ample capacity during peak service. Foil and foam insulation helps retain ice for longer, reducing melt rates and waste. Perforated drainer bases keep ice elevated above meltwater, while integrated dividers improve organisation. The base is creased towards a 38mm waste outlet for effective drainage and easy cleaning. Constructed from durable stainless steel, the unit is built for demanding hospitality environments and delivers a practical, hygienic and space-saving ice storage solution.

PRODUCT FEATURES

- Manufactured with a 304 grade stainless steel top for superior corrosion resistance and hygiene, and a robust 430 grade stainless steel body for strength and durability in demanding bar environments.
- Standardised 800mm height and 505mm depth create a seamless, ergonomic workspace that enhances operator comfort, improves efficiency and delivers a consistent, professional bar appearance.
- Four ice wells provide organised storage, allowing different ice types to be separated for faster service.
- Integrated dividers improve organisation, enabling quick access to ice during busy periods.
- Perforated drainer bases keep ice elevated above meltwater, helping maintain ice quality throughout service.
- Foil and foam insulation retains ice for longer, reducing waste and minimising the need for frequent replenishment.
- Creased base directs water efficiently to the drain outlet, reducing standing water and simplifying maintenance.
- 38mm waste outlet ensures effective drainage, helping keep the ice well clean and hygienic.
- Two Year Parts and Labour Warranty

Whisby Road, Lincoln, LN6 3QZ, UK
www.lincat.co.uk/brands/imc | p: +44 1522 875500

IMC OPTIMUM BARTENDER ICE WELL - 850MM

MODEL: BT850ICE

WEIGHTS & DIMENSIONS

Product Width	850 mm
Product Width (nominal)	850 mm
Product Depth	505 mm
Product Height	800 mm
Product Dimensions (WxDxH) (mm)	850 Millimeter X 505 Millimeter X 800 Millimeter

PRODUCT CERTIFICATION ICONS

CE

bidding specifications

IMC reserves the right to modify specifications or discontinue models without incurring obligation. Dimensions nominal.

www.lincat.co.uk/brands/imc | p: +44 1522 875500 Whisby Road, Lincoln, LN6 3QZ, UK

IMC OPTIMUM BARTENDER ICE WELL - 850MM

MODEL: BT850ICE

TECHNICAL DRAWING

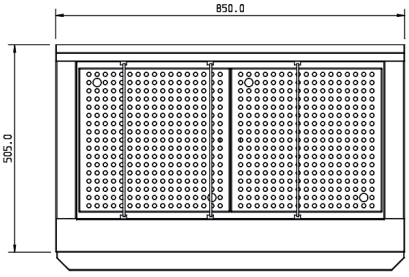

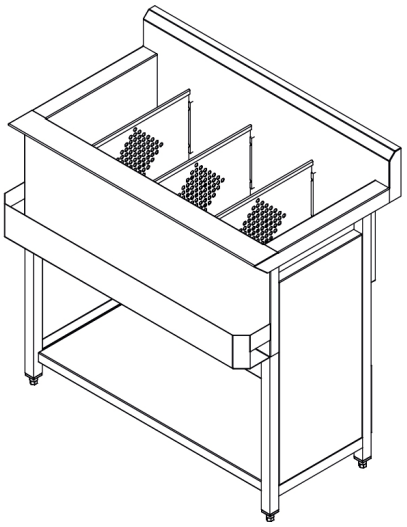

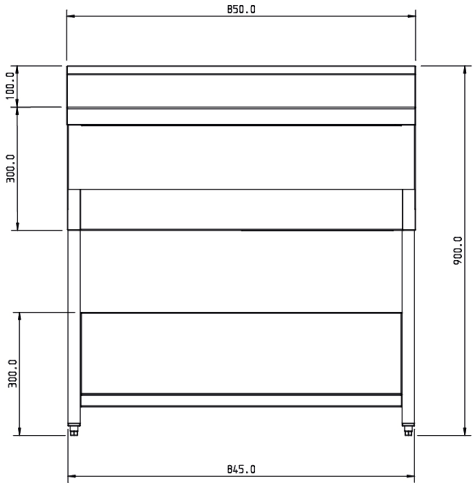

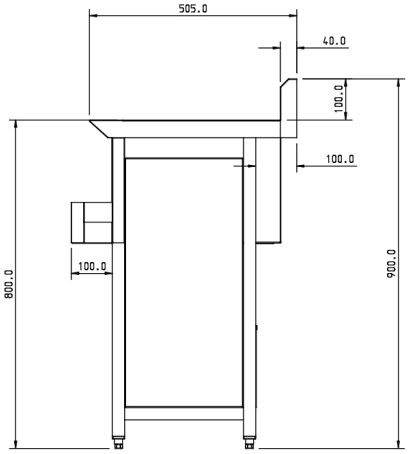

IMC reserves the right to modify specifications or discontinue models without incurring obligation. Dimensions nominal.

Document Auto-Generated