IMC OPTIMUM+ BARTENDER GLASS FRESHNER SINK UNIT WITH VALANCE - 400MM

MODEL: BT900-400GFSV

AIA FILE NUMBER:

ITEM NUMBER:



OPTIMUM By Bartender

UKThe Optimum+ Bartender Glass Freshener Sink Unit with Valance – 400mm combines a built-in glass freshener system and integrated sink in a compact, space-saving design to improve efficiency behind busy commercial bars. Ideal for pubs, hotels, restaurants and event venues, it quickly rinses glasses to remove residue and enhance drink presentation while supporting high standards of hygiene. The open-front design with stainless steel valance provides a clean, professional finish while allowing easy access to plumbing and services. Manufactured from durable stainless steel, it integrates seamlessly with the Optimum Underbar System to create an organised, efficient and professional bar workspace.

PRODUCT OPTIONS AND ACCESSORIES

- BT3020GCBGreen Chopping Block for Glass Freshener Unit

PRODUCT FEATURES

- Manufactured with a 304 grade stainless steel top for superior corrosion resistance and hygiene, and a robust 430 grade stainless steel body for strength and durability in demanding bar environments.
- Standardised 900mm height and 600mm depth create a seamless, ergonomic workspace that enhances operator comfort, improves efficiency and delivers a consistent, professional bar appearance.
- Built-in glass freshener system quickly rinses glasses to remove residue and improve drink presentation.
- Integrated sink provides a convenient washing and rinsing area, helping maintain hygiene throughout busy service.
- Open-front design with stainless steel valance provides a clean, professional appearance while allowing easy access to plumbing and services.
- Dedicated glass preparation station reduces unnecessary movement behind the bar, improving workflow and increasing service speed.
- Seamless Optimum Underbar System integration creates a coordinated, professional bar layout that enhances operational efficiency.
- Two Year Parts and Labour Warranty

IMC OPTIMUM+ BARTENDER GLASS FRESHNER SINK UNIT WITH VALANCE - 400MM

MODEL: BT900-400GFSV

WEIGHTS & DIMENSIONS

Product Width	400 mm
Product Width (nominal)	400 mm
Product Depth	600 mm
Product Height	900 mm
Product Dimensions (WxDxH) (mm)	400 Millimeter X 600 Millimeter X 900 Millimeter

WATER, PLUMBING, AND DRAINAGE SPECIFICATIONS

Water Inlet Size	0.75 in

PRODUCT CERTIFICATION ICONS

CE

bidding specifications

IMC reserves the right to modify specifications or discontinue models without incurring obligation. Dimensions nominal.

www.lincat.co.uk/brands/imc | p: +44 1522 875500 Whisby Road, Lincoln, LN6 3QZ, UK

IMC OPTIMUM+ BARTENDER GLASS FRESHNER SINK UNIT WITH VALANCE - 400MM

MODEL: BT900-400GFSV

TECHNICAL DRAWING

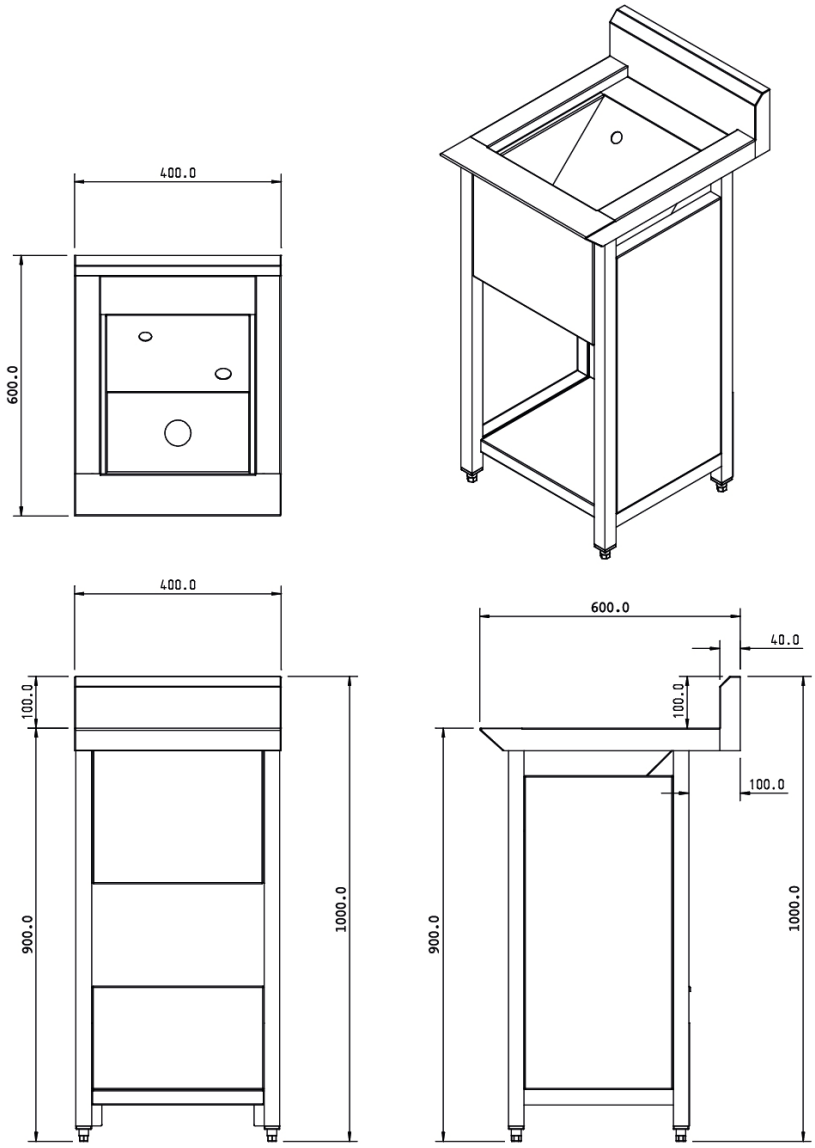

IMC reserves the right to modify specifications or discontinue models without incurring obligation. Dimensions nominal.

Document Auto-Generated