# IMC OPTIMUM+ BARTENDER SINGLE SINK UNIT WITH DOOR - 400MM

# MODEL: BT900-400SSUD

AIA FILE NUMBER:

ITEM NUMBER:



OPTIMUM By Bartender

UKThe Optimum by Bartender Single Sink Unit with Door – 400mm is a compact unit designed for busy commercial bars. The sink top and surround is manufactured from durable 304 grade stainless steel for excellent corrosion resistance and hygiene, while the body is constructed from 430 grade stainless steel, providing strength and durability. Supplied without taps, it allows operators to specify tapware to suit individual project requirements. Designed and manufactured in the UK, it delivers reliable performance and functionality for everyday bar operations.

## PRODUCT FEATURES

- Manufactured with a 304 grade stainless steel top for superior corrosion resistance and hygiene, and a robust 430 grade stainless steel body for strength and durability in demanding bar environments.
- Standardised 900mm height and 600mm depth create a seamless, ergonomic workspace that enhances operator comfort, improves efficiency and delivers a consistent, professional bar appearance.
- Single bowl sink design supports efficient washing and rinsing during busy service periods.
- Enclosed cupboard design conceals pipework for a cleaner and more professional appearance.
- Hinged stainless steel door provides easy access to under-sink storage and services.
- Smooth stainless steel surfaces allow quick cleaning and support high hygiene standards.
- Designed to improve workflow by keeping washing facilities within easy reach of staff.
- Supplied without taps to allow project-specific tap selection and installation flexibility.
- Robust commercial construction is built to withstand continuous daily use.
- UK manufactured for consistent quality, precision fabrication and reliable performance.
- Two Year Parts and Labour Warranty

# IMC OPTIMUM+ BARTENDER SINGLE SINK UNIT WITH DOOR - 400MM

# MODEL: BT900-400SSUD

## WEIGHTS & DIMENSIONS

| | |
|---|---|
| Product Width | 400 mm |
| Product Width (nominal) | 400 mm |
| Product Depth | 600 mm |
| Product Height | 900 mm |
| Product Dimensions (WxDxH) (mm) | 400 Millimeter X 600 Millimeter X 900 Millimeter |

## WATER, PLUMBING, AND DRAINAGE SPECIFICATIONS

| | |
|---|---|
| Water Inlet Size | 0.75 in |

## PRODUCT CERTIFICATION ICONS

CE

bidding specifications

IMC reserves the right to modify specifications or discontinue models without incurring obligation. Dimensions nominal.



www.lincat.co.uk/brands/imc | p: +44 1522 875500 Whisby Road, Lincoln, LN6 3QZ, UK

# IMC OPTIMUM+ BARTENDER SINGLE SINK UNIT WITH DOOR - 400MM

# MODEL: BT900-400SSUD

## TECHNICAL DRAWING

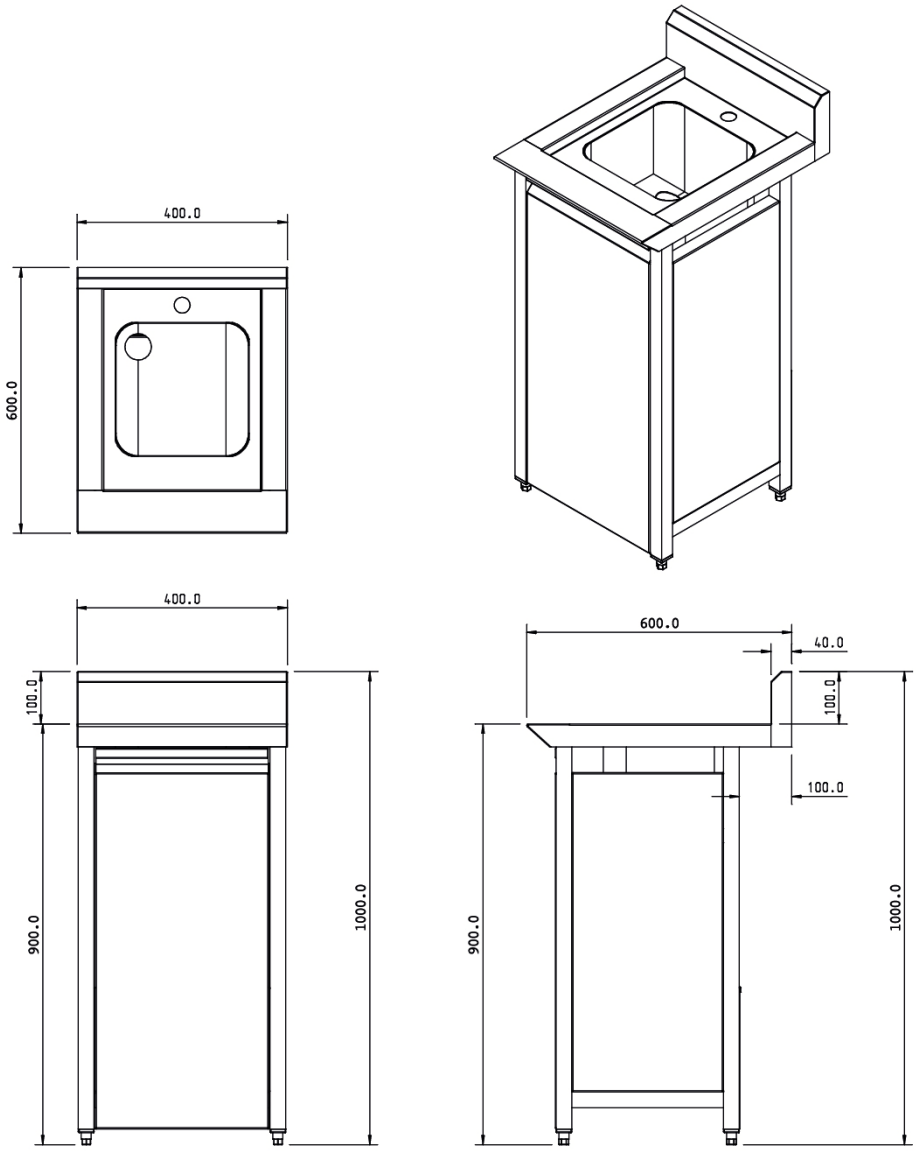


IMC reserves the right to modify specifications or discontinue models without incurring obligation. Dimensions nominal.

Document Auto-Generated