IMC OPTIMUM+ BARTENDER SINGLE SINK UNIT WITH VALANCE - 400MM

MODEL: BT900-400SSUV

AIA FILE NUMBER:

ITEM NUMBER:



OPTIMUM By Bartender

UKManufactured with a 304 grade stainless steel sink top and surround, and a 430 grade stainless steel body, it provides a dedicated area for washing and rinsing while maintaining high standards of hygiene and durability. To provide maximum flexibility, the sink is supplied without taps, allowing operators and designers to select tapware that best suits their project requirements and site specifications.

PRODUCT FEATURES

- Manufactured with a 304 grade stainless steel top for superior corrosion resistance and hygiene, and a robust 430 grade stainless steel body for strength and durability in demanding bar environments.
- Standardised 900mm height and 600mm depth create a seamless, ergonomic workspace that enhances operator comfort, improves efficiency and delivers a consistent, professional bar appearance.
- Single bowl sink design supports efficient washing and rinsing during busy service periods.
- Valance conceals pipework for a cleaner and more professional appearance.
- Smooth stainless steel surfaces allow quick cleaning and support high hygiene standards.
- Designed to improve workflow by keeping washing facilities within easy reach of staff.
- Supplied without taps to allow project-specific tap selection and installation flexibility.
- Robust commercial construction is built to withstand continuous daily use.
- UK manufactured for consistent quality, precision fabrication and reliable performance.
- Two Year Parts and Labour Warranty

IMC OPTIMUM+ BARTENDER SINGLE SINK UNIT WITH VALANCE - 400MM

MODEL: BT900-400SSUV

WEIGHTS & DIMENSIONS

Product Width	400 mm
Product Width (nominal)	400 mm
Product Depth	600 mm
Product Height	900 mm
Product Dimensions (WxDxH) (mm)	400 Millimeter X 600 Millimeter X 900 Millimeter

WATER, PLUMBING, AND DRAINAGE SPECIFICATIONS

Water Inlet Size	0.75 in

PRODUCT CERTIFICATION ICONS

CE

bidding specifications

IMC reserves the right to modify specifications or discontinue models without incurring obligation. Dimensions nominal.

www.lincat.co.uk/brands/imc | p: +44 1522 875500 Whisby Road, Lincoln, LN6 3QZ, UK

IMC OPTIMUM+ BARTENDER SINGLE SINK UNIT WITH VALANCE - 400MM

MODEL: BT900-400SSUV

TECHNICAL DRAWING

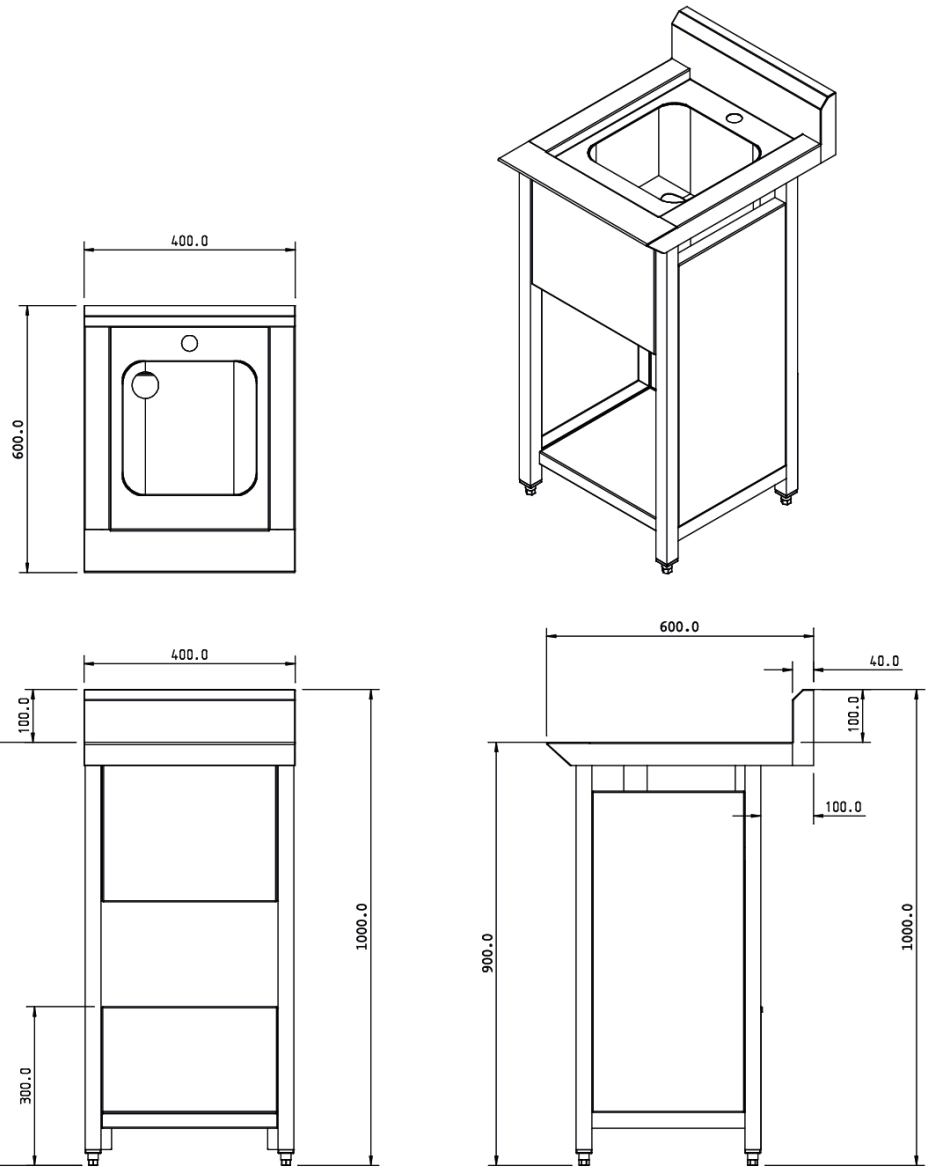

IMC reserves the right to modify specifications or discontinue models without incurring obligation. Dimensions nominal.

Document Auto-Generated