IMC OPTIMUM+ BARTENDER SHELVING UNIT - 400MM

MODEL: BT900-400SU

AIA FILE NUMBER:

ITEM NUMBER:



OPTIMUM By Bartender

UKThe Optimum Bartender Shelving Unit is a durable storage solution designed for busy commercial bars, restaurants and hotels. Available in a range of widths, it provides convenient storage for glassware, bottles, bar tools and other essentials, helping to keep workspaces organised and efficient. Featuring three solid shelves with a premium 304 stainless steel finish, the unit offers a hygienic, easy-to-clean surface suitable for demanding hospitality environments. The robust 430 stainless steel body delivers excellent strength and durability for long-lasting performance. Designed to integrate seamlessly with existing bar equipment, it maximises storage capacity while maintaining a professional appearance and improving workflow efficiency.

PRODUCT FEATURES

- Available in multiple widths to suit different bar layouts
- Three solid stainless steel shelves for reliable storage
- Manufactured with a 304 grade stainless steel top for superior corrosion resistance and hygiene, and a robust 430 grade stainless steel body for strength and durability in demanding bar environments.
- Smooth stainless steel surfaces allow quick cleaning and support high hygiene standards.
- Robust commercial construction is built to withstand continuous daily use.
- Ideal for storing glassware, bottles and bar accessories
- Maximises vertical storage space
- Helps improve workflow and efficiency behind the bar
- Open-front design for quick access to stored items
- UK manufactured for consistent quality, precision fabrication and reliable performance.
- Two Year Parts and Labour Warranty

IMC OPTIMUM+ BARTENDER SHELVING UNIT - 400MM

MODEL: BT900-400SU

WEIGHTS & DIMENSIONS

Product Width	400 mm
Product Width (nominal)	400 mm
Product Depth	600 mm
Product Height	900 mm
Product Dimensions (WxDxH) (mm)	400 Millimeter X 600 Millimeter X 900 Millimeter

PRODUCT CERTIFICATION ICONS

CE

bidding specifications

IMC reserves the right to modify specifications or discontinue models without incurring obligation. Dimensions nominal.

www.lincat.co.uk/brands/imc | p: +44 1522 875500 Whisby Road, Lincoln, LN6 3QZ, UK

IMC OPTIMUM+ BARTENDER SHELVING UNIT - 400MM

MODEL: BT900-400SU

TECHNICAL DRAWING

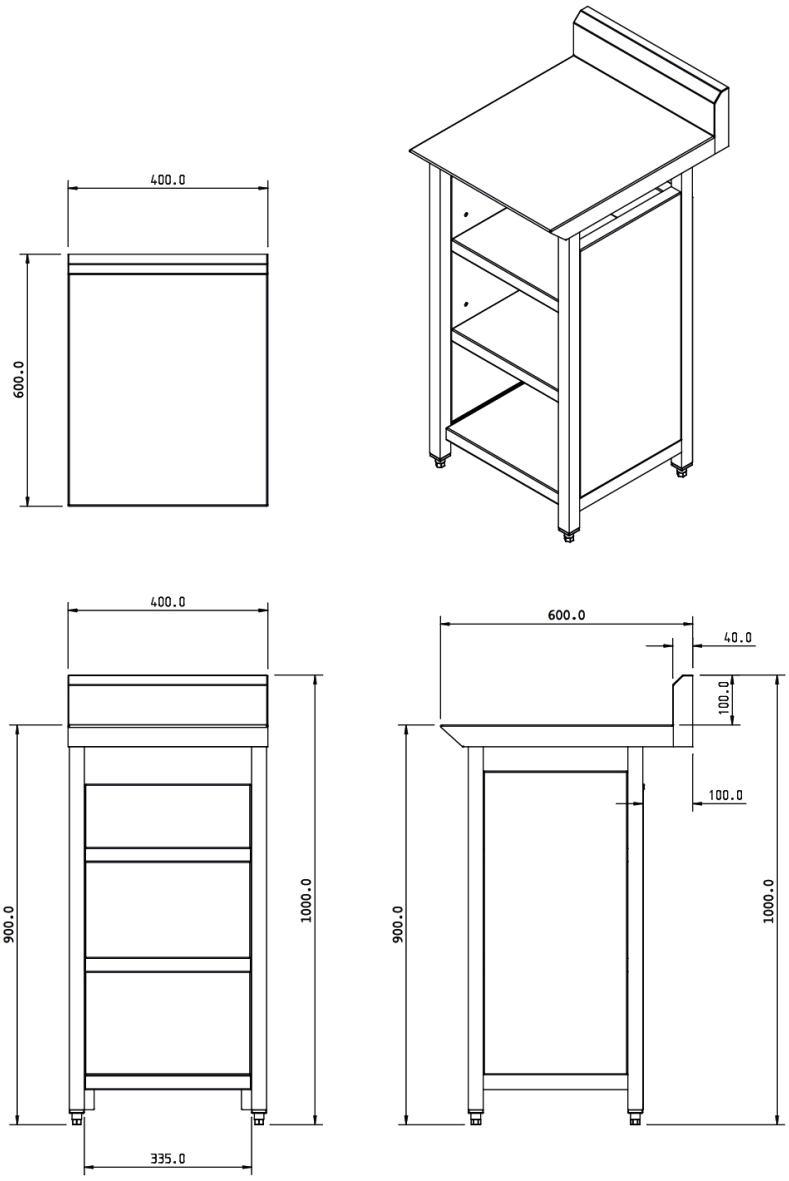

IMC reserves the right to modify specifications or discontinue models without incurring obligation. Dimensions nominal.

Document Auto-Generated