IMC OPTIMUM+ BARTENDER BLENDER STATION - 600MM

MODEL: BT900-600BLST

AIA FILE NUMBER:

ITEM NUMBER:



OPTIMUM
By Bartender

UKThe Optimum Bartender Blender Station provides a dedicated workspace for preparing smoothies, frozen cocktails and blended drinks in busy commercial bars. Featuring a purpose-built blender recess, it helps contain spills, reduce clutter and improve workflow during service. Manufactured with a 304 grade stainless steel worktop and 430 grade stainless steel body, it offers excellent durability, hygiene and easy cleaning for demanding hospitality environments. Designed to integrate seamlessly with the Optimum Underbar System, it creates a professional, organised bar layout while helping staff prepare drinks more efficiently and maintain a cleaner workspace.

PRODUCT FEATURES

- Manufactured with a 304 grade stainless steel top for superior corrosion resistance and hygiene, and a robust 430 grade stainless steel body for strength and durability in demanding bar environments.
- Standardised 900mm height and 600mm depth create a seamless, ergonomic workspace that enhances operator comfort, improves efficiency and delivers a consistent, professional bar appearance.
- Dedicated blender recess provides a secure workspace for commercial blenders, helping contain spills and keep the bar organised.
- Purpose-built blending station streamlines the preparation of smoothies, frozen cocktails and speciality beverages, improving service speed.
- Two Year Parts and Labour Warranty

IMC OPTIMUM+ BARTENDER BLENDER STATION - 600MM

MODEL: BT900-600BLST

WEIGHTS & DIMENSIONS

Product Width	600 mm
Product Width (nominal)	600 mm
Product Depth	600 mm
Product Height	900 mm
Product Dimensions (WxDxH) (mm)	600 Millimeter X 600 Millimeter X 900 Millimeter

PRODUCT CERTIFICATION ICONS

CE

bidding specifications

IMC reserves the right to modify specifications or discontinue models without incurring obligation. Dimensions nominal.

www.lincat.co.uk/brands/imc | p: +44 1522 875500 Whisby Road, Lincoln, LN6 3QZ, UK

IMC OPTIMUM+ BARTENDER BLENDER STATION - 600MM

MODEL: BT900-600BLST

TECHNICAL DRAWING

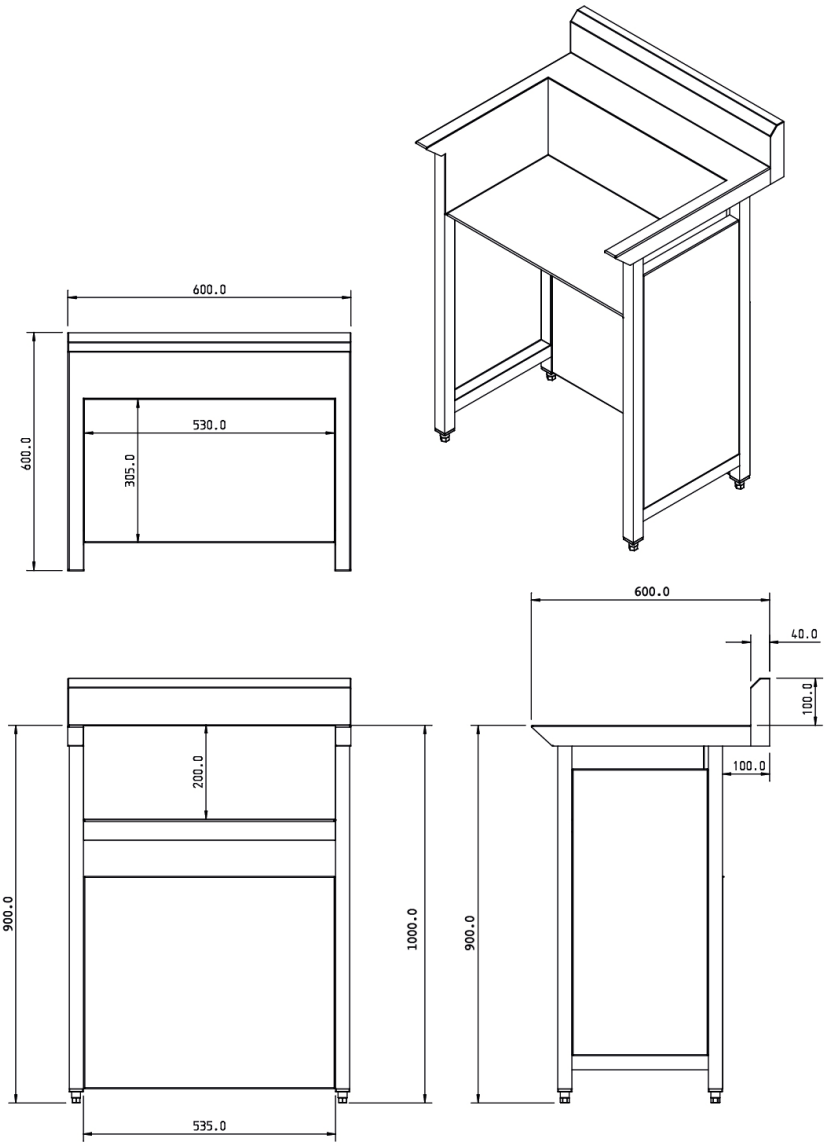

IMC reserves the right to modify specifications or discontinue models without incurring obligation. Dimensions nominal.

Document Auto-Generated