IMC OPTIMUM+ BARTENDER CORNER TOP - 600MM

MODEL: BT900-600CT

AIA FILE NUMBER:

ITEM NUMBER:

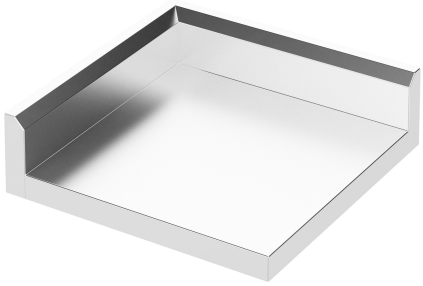

UKThe Optimum+ Bartender Corner Worktop is designed to maximise workspace and create seamless transitions between underbar modules, helping improve efficiency in busy commercial bars. Manufactured from high-quality 304 grade stainless steel, it offers outstanding durability, hygiene and easy cleaning for everyday use. Its space-saving corner design makes the most of available bar layouts while creating a smooth, organised workflow. Designed for seamless integration with the Optimum Underbar System and manufactured in the UK, it provides a practical, professional solution for modern bar environments.

OPTIMUM
By Bartender

PRODUCT FEATURES

- Manufactured with a 304 grade stainless steel top for superior corrosion resistance and hygiene, and a robust 430 grade stainless steel body for strength and durability in demanding bar environments.
- Designed to maximise the use of corner spaces within busy commercial bars
- Standardised 600mm depth create a seamless, ergonomic workspace that enhances operator comfort, improves efficiency and delivers a consistent, professional bar appearance.
- Smooth stainless steel surfaces allow quick cleaning and support high hygiene standards.
- Robust commercial construction is built to withstand continuous daily use.
- UK manufactured for consistent quality, precision fabrication and reliable performance.
- Two Year Parts and Labour Warranty

IMC OPTIMUM+ BARTENDER CORNER TOP - 600MM

MODEL: BT900-600CT

WEIGHTS & DIMENSIONS

Product Width	600 mm
Product Width (nominal)	600 mm
Product Depth	600 mm

PRODUCT CERTIFICATION ICONS

CE

bidding specifications

IMC reserves the right to modify specifications or discontinue models without incurring obligation. Dimensions nominal.

Document Auto-Generated

IMC OPTIMUM+ BARTENDER CORNER TOP - 600MM

MODEL: BT900-600CT

TECHNICAL DRAWING

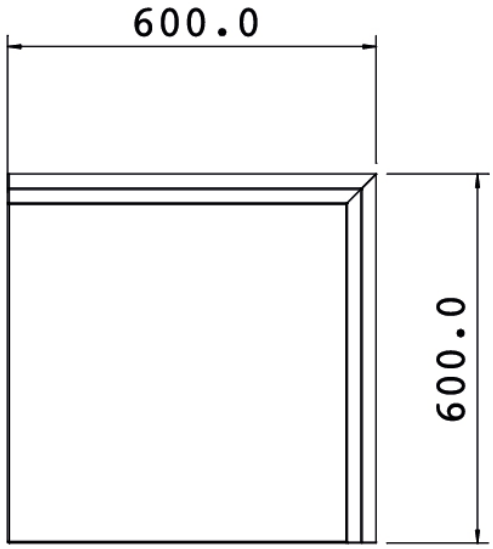

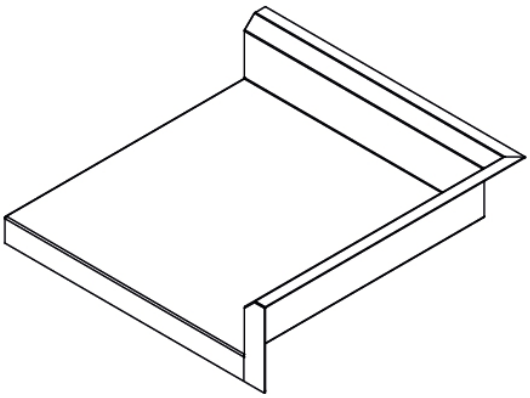

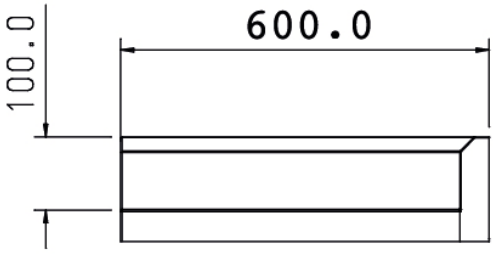

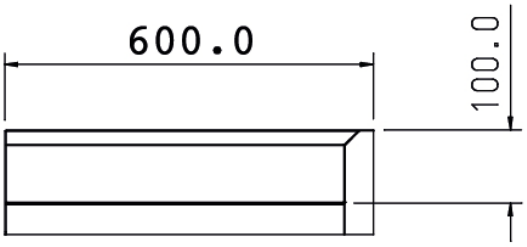

IMC reserves the right to modify specifications or discontinue models without incurring obligation. Dimensions nominal.

Document Auto-Generated