IMC OPTIMUM+ BARTENDER TILL STATION - 600MM

MODEL: BT900-600TILL

AIA FILE NUMBER:

ITEM NUMBER:



OPTIMUM By Bartender

UKThe Optimum Bartender Till Station provides a dedicated point-of-sale area to keep commercial bars organised and operating efficiently. Designed for pubs, bars, hotels and restaurants, it creates a practical workspace for EPOS systems and payment terminals while integrating seamlessly with the Optimum Underbar System. A built-in cable management port keeps power and data cables neatly concealed for a tidy, professional appearance. Manufactured with a 304 grade stainless steel worktop and 430 grade stainless steel body, it offers durability, easy cleaning and excellent hygiene. Designed and manufactured in the UK, it helps improve workflow, speed up transactions and create a more efficient bar operation.

PRODUCT FEATURES

- Manufactured with a 304 grade stainless steel top for superior corrosion resistance and hygiene, and a robust 430 grade stainless steel body for strength and durability in demanding bar environments.
- Standardised 900mm height and 600mm depth create a seamless, ergonomic workspace that enhances operator comfort, improves efficiency and delivers a consistent, professional bar appearance.
- Dedicated till station provides an organised point-of-sale area to improve workflow and speed up customer transactions.
- Designed for EPOS systems and payment terminals creates a practical workspace that keeps essential equipment within easy reach.
- Built-in cable management port keeps power and data cables neatly concealed for a cleaner, safer and more professional bar environment.
- Seamless integration with the Optimum Underbar System creates a coordinated bar layout that enhances efficiency and maximises available workspace.
- Two Year Parts and Labour Warranty

Whisby Road, Lincoln, LN6 3QZ, UK
www.lincat.co.uk/brands/imc | p: +44 1522 875500

IMC OPTIMUM+ BARTENDER TILL STATION - 600MM

MODEL: BT900-600TILL

WEIGHTS & DIMENSIONS

Product Width	600 mm
Product Width (nominal)	600 mm
Product Depth	600 mm
Product Height	900 mm
Product Dimensions (WxDxH) (mm)	600 Millimeter X 600 Millimeter X 900 Millimeter

PRODUCT CERTIFICATION ICONS

CE

bidding specifications

IMC reserves the right to modify specifications or discontinue models without incurring obligation. Dimensions nominal.

www.lincat.co.uk/brands/imc | p: +44 1522 875500 Whisby Road, Lincoln, LN6 3QZ, UK

IMC OPTIMUM+ BARTENDER TILL STATION - 600MM

MODEL: BT900-600TILL

TECHNICAL DRAWING

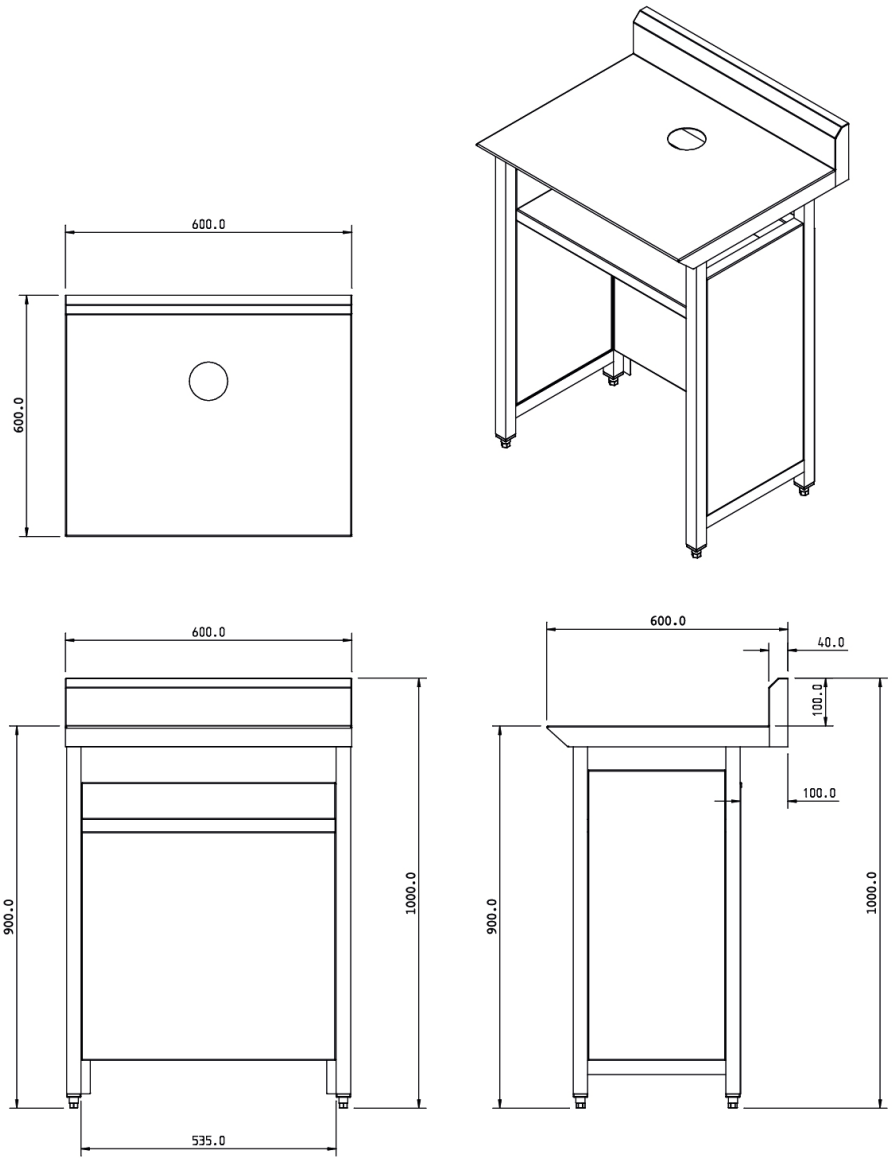

IMC reserves the right to modify specifications or discontinue models without incurring obligation. Dimensions nominal.

Document Auto-Generated