IMC OPTIMUM+ BARTENDER PLAIN BRIDGE TOP - 800MM

MODEL: BT900-800PBT

AIA FILE NUMBER:

ITEM NUMBER:

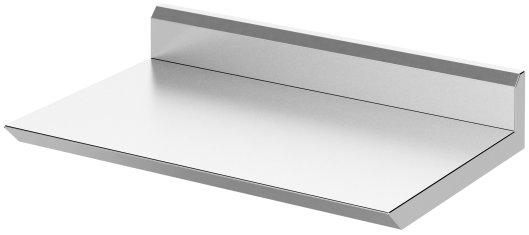

OPTIMUM By Bartender

UKThe Optimum Plain Bridge Top provides a continuous working surface between bar modules, helping to improve workflow and efficiency in busy commercial environments. Manufactured from high-quality 304 stainless steel, it offers excellent durability, corrosion resistance and hygiene. The solid surface is ideal for drink preparation, service and general bar operations, creating a seamless and practical workspace. Available in a variety of widths to suit different layouts, the bridge top integrates easily with existing bar equipment. Its smooth finish is easy to clean, making it a durable and professional addition to bars, pubs, restaurants and hotels.

PRODUCT FEATURES

- Standardised 600mm depth create a seamless, ergonomic workspace that enhances operator comfort, improves efficiency and delivers a consistent, professional bar appearance.
- Solid work surface provides a practical area for drink preparation and service tasks.
- Available in a range of widths to suit different bar layouts and installation requirements.
- Smooth, professional finish complements modern bars, pubs, restaurants and hotels.
- Two Year Parts and Labour Warranty

IMC OPTIMUM+ BARTENDER PLAIN BRIDGE TOP - 800MM

MODEL: BT900-800PBT

WEIGHTS & DIMENSIONS

Product Width	800 mm
Product Width (nominal)	800 mm
Product Depth	600 mm

PRODUCT CERTIFICATION ICONS

CE

bidding specifications

IMC reserves the right to modify specifications or discontinue models without incurring obligation. Dimensions nominal.

Document Auto-Generated

IMC OPTIMUM+ BARTENDER PLAIN BRIDGE TOP - 800MM

MODEL: BT900-800PBT

TECHNICAL DRAWING

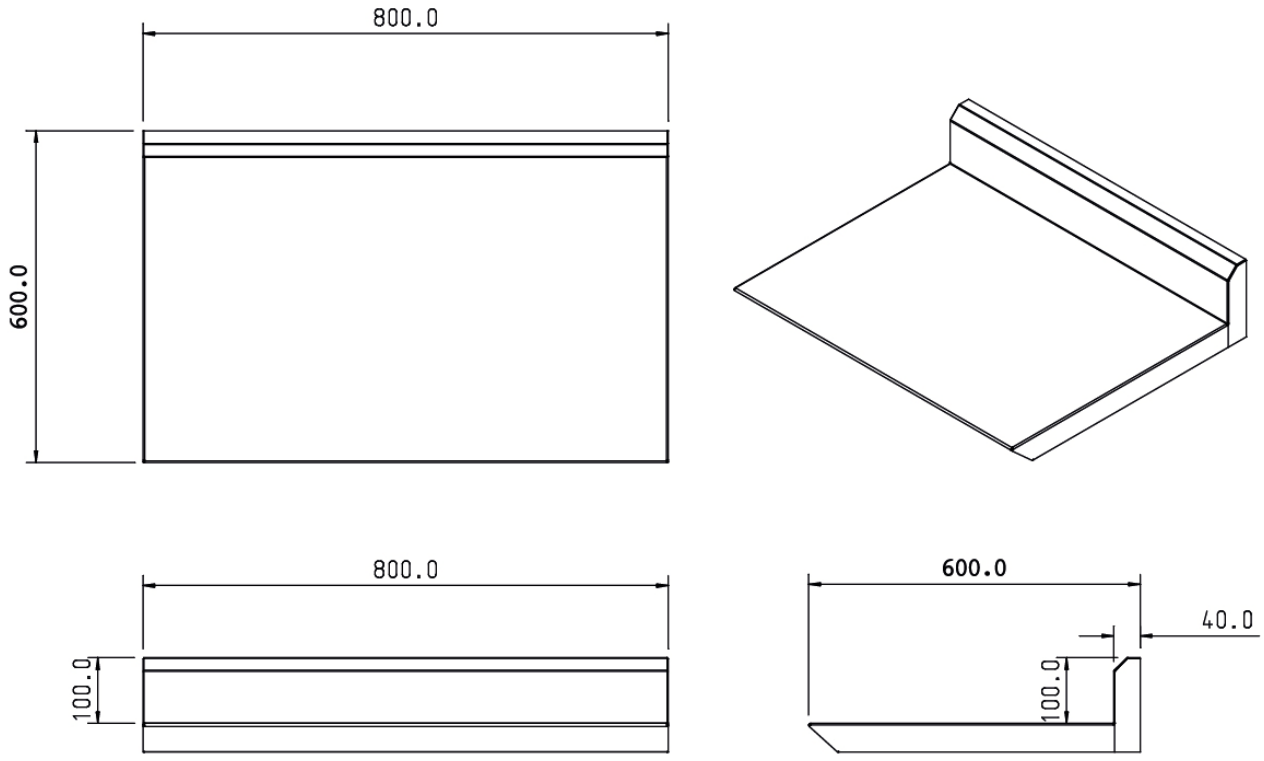

IMC reserves the right to modify specifications or discontinue models without incurring obligation. Dimensions nominal.

Document Auto-Generated