IMC VULTURE 904X FLOOR-MOUNTED FOOD WASTE DISPOSER - 1 PHASE - W 438 MM - 1.1 KW

MODEL: F54/500

AIA FILE NUMBER:

ITEM NUMBER:



Vulture

UKFast and efficient, the 904X Waste Disposer is able to dispose of 500kg of food waste per hour and handles up to 1000 covers per sitting, making it ideal for larger hotels, hospitals, universities, prisons and food preparation companies.

The 904X is able to switch itself off to save energy and has an automatic rinse function, to prevent nasty odours.

It is suitable for medium waste - plate waste, vegetables and peelings, meat and fish scraps, and small bones. The free-standing unit can be welded into tabling with a E30/095 hopper rim, for quick loading.

The stainless steel 904X Waste Disposer is easy to

PRODUCT FEATURES

- Fast and efficient disposal of up to 500kg of food waste per hour.
- Handles up to 1000 covers per sitting ideal for large kitchens.
- For medium waste (plate waste, vegetables and peelings, meat and fish scraps).
- Free standing design, but can be welded into tabling with E30/095 hopper rim.
- Suitable for large kitchens with single phase power supply.
- Manually reversible motor to extend operational life.

IMC VULTURE 904X FLOOR-MOUNTED FOOD WASTE DISPOSER - 1 PHASE - W 438 MM - 1.1 KW

MODEL: F54/500

WEIGHTS & DIMENSIONS

Product Width	438 mm
Product Depth	564 mm
Product Height	800 mm
Product Dimensions (WxDxH) (mm)	438 Millimeter X 564 Millimeter X 800 Millimeter

SHIPPING DETAILS

Ship Width	63 cm
Ship Depth	48 cm
Ship Height	104 cm
Ship Weight	56.65 kg
Ship Method	Small Parcel (Ups Fedex Dhl)
Shipping Package Type	Pieces

WATER, PLUMBING, AND DRAINAGE SPECIFICATIONS

Water Inlet Size	15 mm
Water Inlet Pressure	0.4 Bar

PRODUCT CERTIFICATION ICONS

Made in UK UKCA IP55

ENERGY SPECIFICATIONS

Primary Energy Type	Electric
Electrical Volts	230V

ADDITIONAL TECHNICAL SPECIFICATIONS

Meal Waste Servings Processed Per Sitting	1,000
Motor Power	1.5

bidding specifications

IMC reserves the right to modify specifications or discontinue models without incurring obligation. Dimensions nominal.

Document Auto-Generated

IMC VULTURE 904X FLOOR-MOUNTED FOOD WASTE DISPOSER - 1 PHASE - W 438 MM - 1.1 KW

MODEL: F54/500

TECHNICAL DRAWING

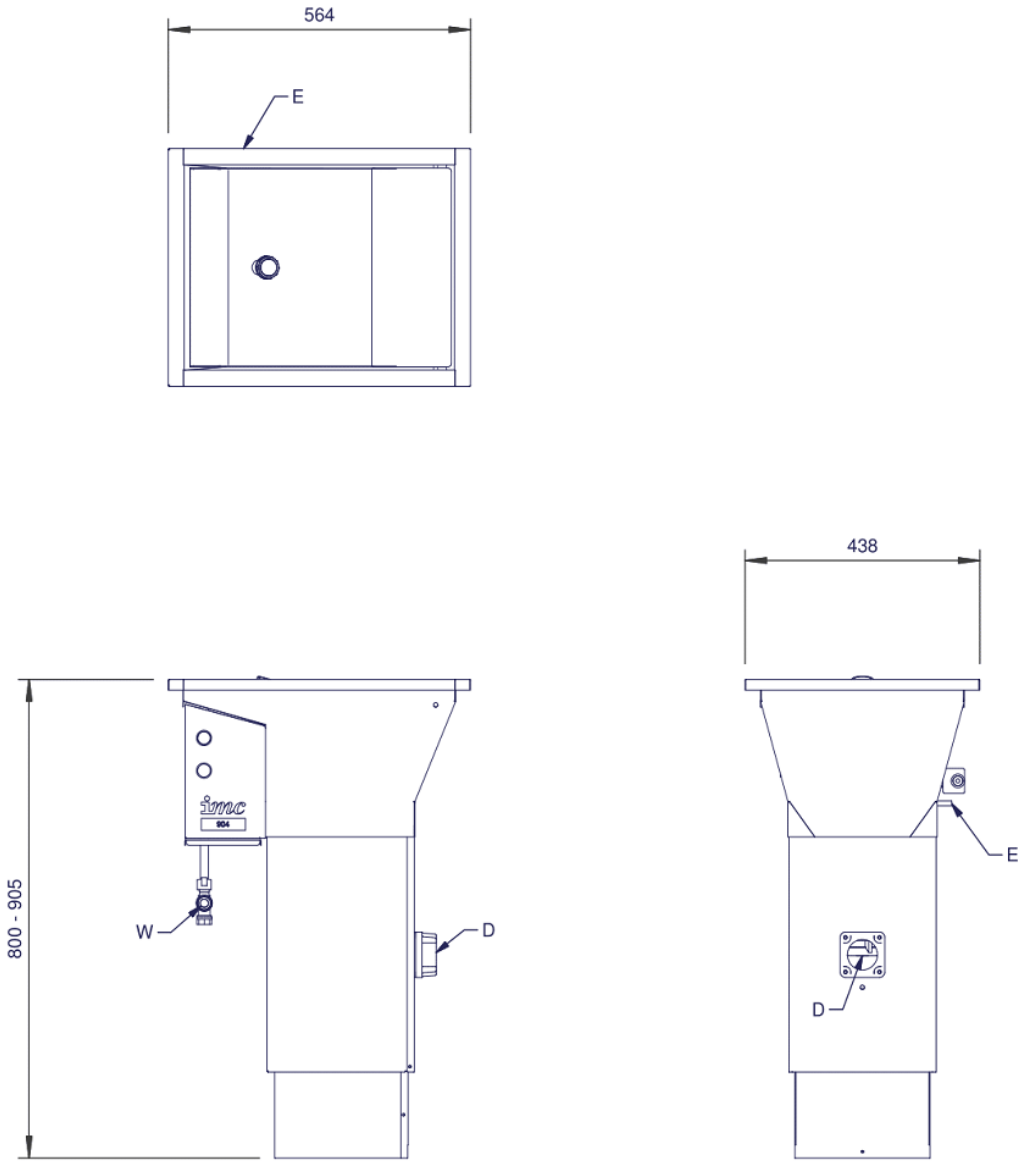

IMC reserves the right to modify specifications or discontinue models without incurring obligation. Dimensions nominal.

Document Auto-Generated