IMC VULTURE 1604 FLOOR-MOUNTED FOOD WASTE DISPOSER - 3 PHASE [4 WIRE] [AIR BREAK] - W 514 MM - 4.0 KW

MODEL: F54/727

AIA FILE NUMBER:

ITEM NUMBER:



Vulture

UKFast and efficient, the 1604 Waste Disposer with airbreak enables large kitchens to remove waste quickly and simply. It is able to dispose of 900kg of food waste per hour and handles up to 1850 covers per sitting, making it ideal for larger hotels, hospitals, universities, prisons and food preparation companies.

The 1604 Waste Disposer is suitable for tough waste - red meat bones, cauliflower stalks and fish skins. The free-standing unit can be welded into tabling with a E30/096 hopper rim, making it quick and easy to load, saving staff time and labour.

With a smooth stainless steel finish, the 1604 Waste Disposer is easy to clean and also features interlocks, for enhanced operator safety.

PRODUCT FEATURES

- Fast and efficient disposal of up to 900kg of food waste per hour.
- Handles up to 1000 covers per sitting ideal for large kitchens.
- For medium waste (plate waste, vegetables and peelings, meat and fish scraps).
- Free standing design, but can be welded into tabling with E30/095 hopper rim.
- Suitable for large kitchens with single phase power supply.
- Manually reversible motor to extend operational life.

IMC VULTURE 1604 FLOOR-MOUNTED FOOD WASTE DISPOSER - 3 PHASE [4 WIRE] [AIR BREAK] - W 514 MM - 4.0 KW

MODEL: F54/727

WEIGHTS & DIMENSIONS

Product Width	514 mm
Product Depth	740 mm
Product Height	1,014 mm
Product Dimensions (WxDxH) (mm)	514 Millimeter X 740 Millimeter X 1014 Millimeter

SHIPPING DETAILS

Ship Width	79 cm
Ship Depth	54 cm
Ship Height	105 cm
Ship Weight	94.05 kg
Ship Method	Ltl Common Carrier
Shipping Package Type	Pieces

WATER, PLUMBING, AND DRAINAGE SPECIFICATIONS

Water Inlet Size	22 mm
Water Inlet Pressure	0.18 Bar

PRODUCT CERTIFICATION ICONS

Made in UK UKCA IP55

ENERGY SPECIFICATIONS

Primary Energy Type	Electric
Electrical Volts	400V

ADDITIONAL TECHNICAL SPECIFICATIONS

Meal Waste Servings Processed Per Sitting	1,850
Motor Power	5.4

bidding specifications

IMC reserves the right to modify specifications or discontinue models without incurring obligation. Dimensions nominal.

Document Auto-Generated

IMC VULTURE 1604 FLOOR-MOUNTED FOOD WASTE DISPOSER - 3 PHASE [4 WIRE] [AIR BREAK] - W 514 MM - 4.0 KW

MODEL: F54/727

TECHNICAL DRAWING

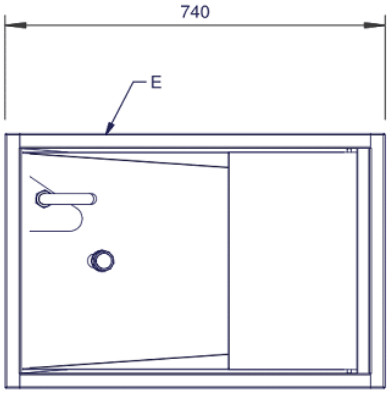

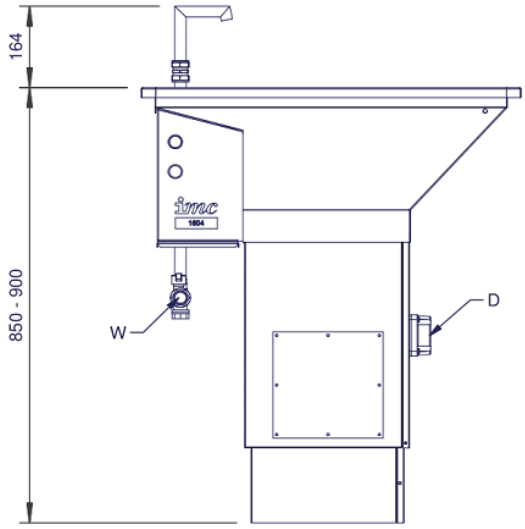

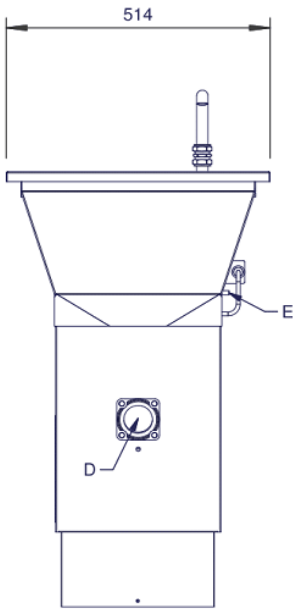

IMC reserves the right to modify specifications or discontinue models without incurring obligation. Dimensions nominal.

Document Auto-Generated