# IMC VULTURE 904X FLOOR-MOUNTED FOOD WASTE DISPOSER - 3 PHASE [5 WIRE] [AIR BREAK] - W 438 MM - 1.1 KW

# MODEL: F54/734

UKFast and efficient, the 904X Waste Disposer with airbreak is able to dispose of 500kg of food waste per hour and handles up to 1000 covers per sitting, making it ideal for larger hotels, hospitals, universities, prisons and food preparation companies.

The 904X is able to switch itself off to save energy and has an automatic rinse function, to prevent nasty odours.

It is suitable for medium waste - plate waste, vegetables and peelings, meat and fish scraps, and small bones. The free-standing unit can be welded into tabling with a E30/095 hopper rim, for quick loading.

AIA FILE NUMBER:

ITEM NUMBER:

## PRODUCT FEATURES

- Fast and efficient disposal of up to 500kg of food waste per hour.
- Handles up to 1000 covers per sitting ideal for large kitchens.
- For medium waste (plate waste, vegetables and peelings, meat and fish scraps).
- Free standing design, but can be welded into tabling with E30/095 hopper rim.
- Suitable for large kitchens with single phase power supply.
- Manually reversible motor to extend operational life.



Whisby Road, Lincoln, LN6 3QZ, UK
www.lincat.co.uk/brands/imc | p: +44 1522 875500

# IMC VULTURE 904X FLOOR-MOUNTED FOOD WASTE DISPOSER - 3 PHASE [5 WIRE] [AIR BREAK] - W 438 MM - 1.1 KW

# MODEL: F54/734

## WEIGHTS & DIMENSIONS

| | |
|---|---|
| Product Width | 438 mm |
| Product Depth | 564 mm |
| Product Height | 942 mm |
| Product Dimensions (WxDxH) (mm) | 438 Millimeter X 564 Millimeter X 942 Millimeter |

## SHIPPING DETAILS

| | |
|---|---|
| Ship Width | 62 cm |
| Ship Depth | 48 cm |
| Ship Height | 104 cm |
| Ship Weight | 56.65 kg |
| Ship Method | Small Parcel (Ups Fedex Dhl) |
| Shipping Package Type | Pieces |

## WATER, PLUMBING, AND DRAINAGE SPECIFICATIONS

| | |
|---|---|
| Water Inlet Size | 15 mm |
| Water Inlet Pressure | 0.4 Bar |

## PRODUCT CERTIFICATION ICONS

Made in UK UK CA IP55

## ENERGY SPECIFICATIONS

| | |
|---|---|
| Primary Energy Type | Electric |
| Electrical Volts | 400V |

## ADDITIONAL TECHNICAL SPECIFICATIONS

| | |
|---|---|
| Meal Waste Servings Processed Per Sitting | 1,000 |
| Motor Power | 1.5 |

bidding specifications

IMC reserves the right to modify specifications or discontinue models without incurring obligation. Dimensions nominal.

Document Auto-Generated

# IMC VULTURE 904X FLOOR-MOUNTED FOOD WASTE DISPOSER - 3 PHASE [5 WIRE] [AIR BREAK] - W 438 MM - 1.1 KW

# MODEL: F54/734

## TECHNICAL DRAWING

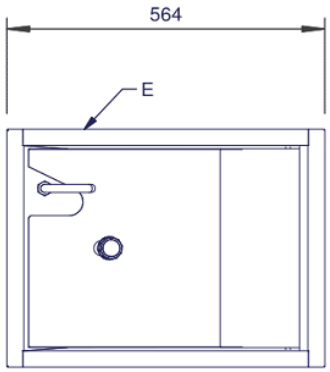


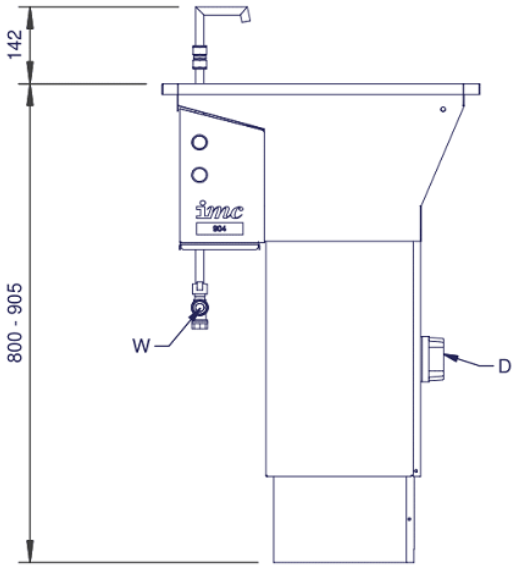


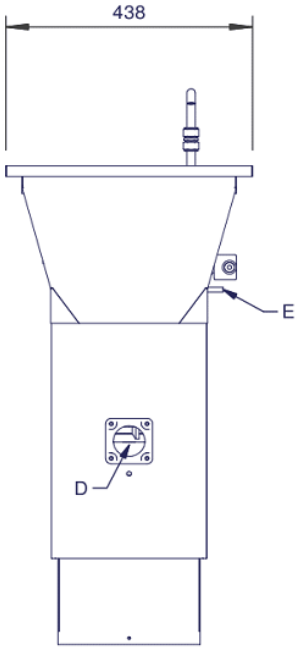


IMC reserves the right to modify specifications or discontinue models without incurring obligation. Dimensions nominal.

Document Auto-Generated