# IMC SP25 FLOOR-MOUNTED POTATO PEELER - 3 PHASE - H 1080 MM - 0.75 KW

# MODEL: F58/911

AIA FILE NUMBER:

ITEM NUMBER:



SP PEELER

UKWith a small footprint and quiet motor, the energy-efficient SP25 (3PH) peeler is ideal for medium and large kitchens with a three-phase power supply. Offering the speed and convenience of pre-prepared products, it has the power to peel up to 25kg of vegetables in two minutes - up to 513kg per hour - saving space and time.

Simple and safe to operate, the floor-standing SP25 (3PH) has a low pedestal, for quick and easy discharge of potatoes.

Constructed from rust-proof stainless steel, the SP25 (3PH) is robust and low maintenance, with a heavy-duty belt and pulley drive. Its corrosion-resistant cast aluminium plate has a thick grit layer to deliver effective peeling, whilst stainless steel

## PRODUCT OPTIONS AND ACCESSORIES

- S58/568 Filter Basket - Integral - for SP Potato Peeler
- S58/569 Interceptor Tank - for SP Potato Peeler [pedestal mounted/2 " BSP]
- A29/003 Lid Retaining Strap for SP/VQ Potato Peeler
- S61/168 Stand for SP Potato Peeler
- S58/570 Waste Ejector for SP Potato Peeler [2" BSP]

## PRODUCT FEATURES

- Able to peel 12kg of potatoes in 2 minutes up to 220kg per hour
- Upright design with small footprint, ideal for medium and large operations
- Low pedestal for quick and easy discharge of potatoes
- Lubricated, heavy duty gearbox makes peeling operation smooth and reliable
- Dual position waste outlets and smooth cylinder base for quick, easy cleaning proof plate and replaceable liners for effective peeling
- Long lasting, rust
- Suitable for kitchens with single phase power supply
- WRAS approved Class A air break and brass spray nozzle to prevent water escape

# IMC SP25 FLOOR-MOUNTED POTATO PEELER - 3 PHASE - H 1080 MM - 0.75 KW

# MODEL: F58/911

## WEIGHTS & DIMENSIONS

| | |
|---|---|
| Product Width | 602 mm |
| Product Depth | 727 mm |
| Product Height | 1,057 mm |
| Product Dimensions (WxDxH) (mm) | 602 Millimeter X 727 Millimeter X 1057 Millimeter |

## SHIPPING DETAILS

| | |
|---|---|
| Ship Width | 79 cm |
| Ship Depth | 65 cm |
| Ship Height | 155 cm |
| Ship Weight | 73.15 kg |
| Ship Method | Small Parcel (Ups Fedex Dhl) |
| Shipping Package Type | Pieces |

## WATER, PLUMBING, AND DRAINAGE SPECIFICATIONS

| | |
|---|---|
| Water Inlet Size | 12 mm |
| Water Inlet Pressure Minimum | 2.7 Bar |
| Water Inlet Pressure Maximum | 3.8 Bar |

## PRODUCT CERTIFICATION ICONS

Made in UK UKCA IP55

## ENERGY SPECIFICATIONS

| | |
|---|---|
| Primary Energy Type | Electric |
| Electrical Volts | 400V |

## ADDITIONAL TECHNICAL SPECIFICATIONS

| | |
|---|---|
| Hopper Load | 25 |
| Motor Power | 1 |

bidding specifications

IMC reserves the right to modify specifications or discontinue models without incurring obligation. Dimensions nominal.

Document Auto-Generated

# IMC SP25 FLOOR-MOUNTED POTATO PEELER - 3 PHASE - H 1080 MM - 0.75 KW

# MODEL: F58/911

## TECHNICAL DRAWING

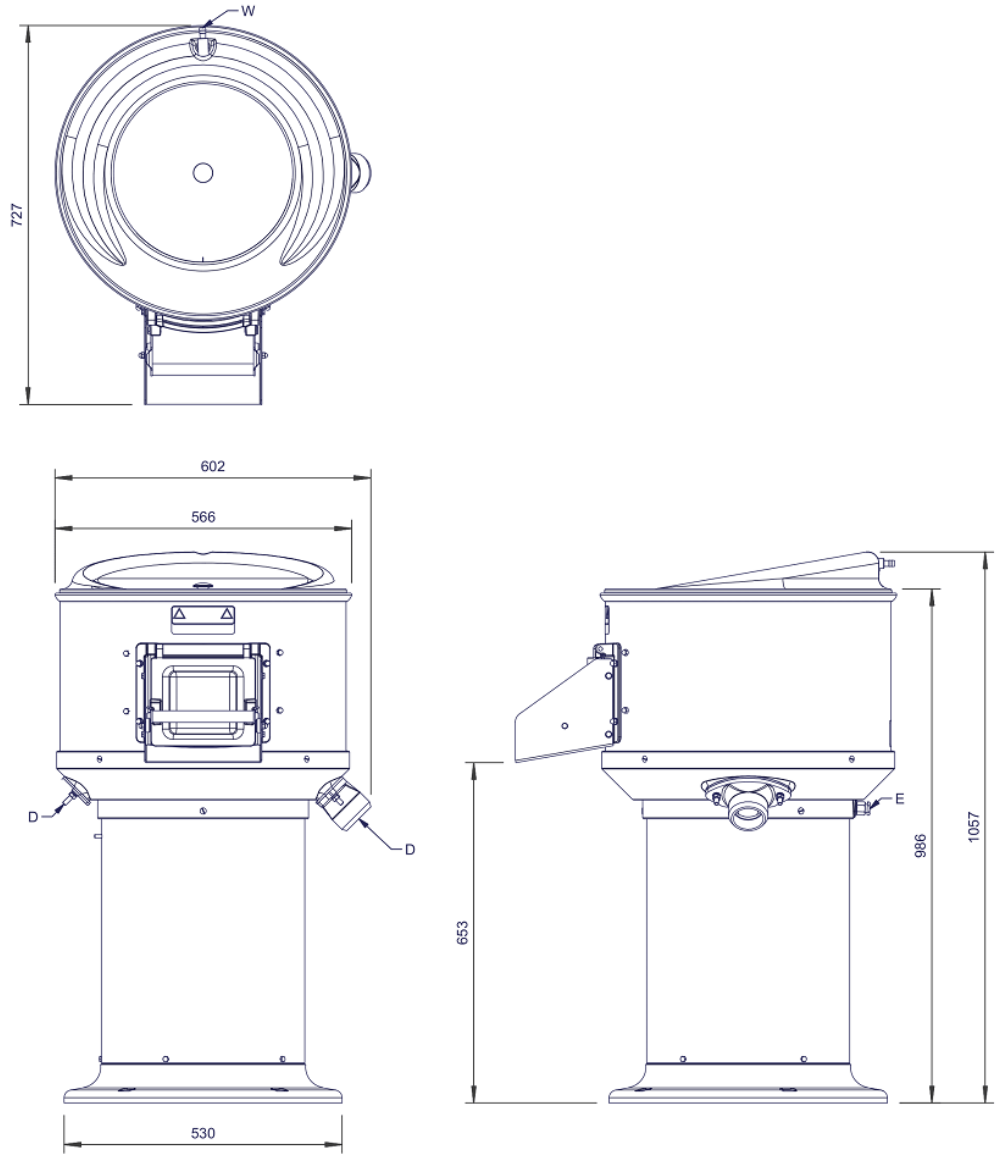


IMC reserves the right to modify specifications or discontinue models without incurring obligation. Dimensions nominal.

Document Auto-Generated