IMC SP25H FLOOR-MOUNTED POTATO PEELER - 1 PHASE - H 1360 MM - 0.75 KW

MODEL: F58/912

AIA FILE NUMBER:

ITEM NUMBER:



SP PEELER

UKWith a small footprint and quiet motor, the energy-efficient SP25 (1PH) peeler is ideal for medium and large kitchens with a single-phase power supply. Offering the speed and convenience of pre-prepared products, it has the power to peel up to 25kg of vegetables in two minutes - up to 513kg per hour - saving space and time.

Simple and safe to operate, the floor-standing SP25 (1PH) has a high pedestal, allowing the unit to be emptied into a sink.

Constructed from rust-proof stainless steel, the SP25 (1PH) is robust and low maintenance, with a heavy-duty belt and pulley drive. Its corrosion-resistant cast aluminium plate has a thick grit layer to deliver effective peeling, whilst stainless steel

PRODUCT OPTIONS AND ACCESSORIES

- S58/568 Filter Basket - Integral - for SP Potato Peeler
- S58/569 Interceptor Tank - for SP Potato Peeler [pedestal mounted/2 " BSP]
- A29/003 Lid Retaining Strap for SP/VQ Potato Peeler
- S58/570 Waste Ejector for SP Potato Peeler [2" BSP]

PRODUCT FEATURES

- Able to peel 12kg of potatoes in 2 minutes up to 220kg per hour
- Upright design with small footprint, ideal for medium and large operations
- Low pedestal for quick and easy discharge of potatoes
- Lubricated, heavy duty gearbox makes peeling operation smooth and reliable
- Dual position waste outlets and smooth cylinder base for quick, easy cleaning proof plate and replaceable liners for effective peeling
- Long lasting, rust
- Suitable for kitchens with single phase power supply
- WRAS approved Class A air break and brass spray nozzle to prevent water escape

IMC SP25H FLOOR-MOUNTED POTATO PEELER - 1 PHASE - H 1360 MM - 0.75 KW

MODEL: F58/912

WEIGHTS & DIMENSIONS

Product Width	603 mm
Product Depth	728 mm
Product Height	1,357 mm
Product Dimensions (WxDxH) (mm)	603 Millimeter X 728 Millimeter X 1357 Millimeter

SHIPPING DETAILS

Ship Width	79 cm
Ship Depth	65 cm
Ship Height	155 cm
Ship Weight	74.8 kg
Ship Method	Small Parcel (Ups Fedex Dhl)
Shipping Package Type	Pieces

WATER, PLUMBING, AND DRAINAGE SPECIFICATIONS

Water Inlet Size	12 mm
Water Inlet Pressure Minimum	2.7 Bar
Water Inlet Pressure Maximum	3.8 Bar

PRODUCT CERTIFICATION ICONS

Made in UK UKCA IP55

ENERGY SPECIFICATIONS

Primary Energy Type	Electric
Electrical Volts	230V

ADDITIONAL TECHNICAL SPECIFICATIONS

Hopper Load	25
Motor Power	1

bidding specifications

IMC reserves the right to modify specifications or discontinue models without incurring obligation. Dimensions nominal.

Document Auto-Generated

IMC SP25H FLOOR-MOUNTED POTATO PEELER - 1 PHASE - H 1360 MM - 0.75 KW

MODEL: F58/912

TECHNICAL DRAWING

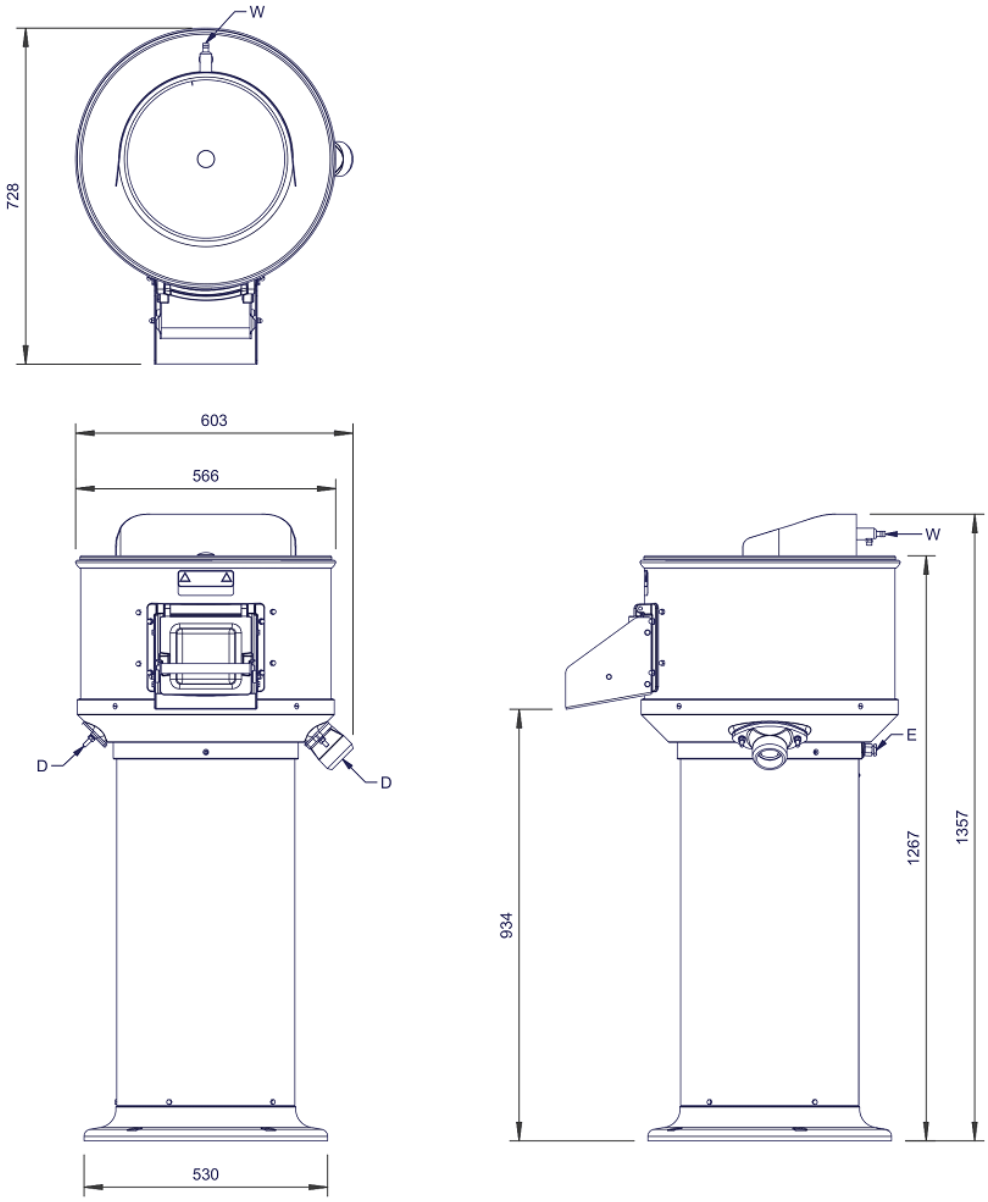

IMC reserves the right to modify specifications or discontinue models without incurring obligation. Dimensions nominal.

Document Auto-Generated