IMC MF5 COUNTER-TOP VEGETABLE PEELER - 1 PHASE - W 366 MM - 0.25 KW

MODEL: F59/500

AIA FILE NUMBER:

ITEM NUMBER:



MF
MULTI-FUNCTIONAL
PEELER

UKThe versatile, energy-efficient MF5 (1PH) is a multi-functional peeler which is ideal for small to medium kitchens, with a single-phase power supply. A variety of plate options means it can be used to wash and peel root vegetables, including potatoes and onions, wash mussels, clams and other bivalve shellfish, and spin salads.

With a thicker peeling plate for long operating life, the MF5 (1PH) is able to peel up to 111kg of vegetables per hour in 5kg batches making it a cost-effective and labour-saving solution.

Easy to operate with built-in controls, the unit has an interlocking lid and door for user safety. To ensure perfect results every time, the MF5 (1PH) has a perspex viewing pane to monitor progress,

PRODUCT FEATURES

- Able to peel 12kg of potatoes in 2 minutes up to 220kg per hour
- Upright design with small footprint, ideal for medium and large operations
- Low pedestal for quick and easy discharge of potatoes
- Lubricated, heavy duty gearbox makes peeling operation smooth and reliable
- Dual position waste outlets and smooth cylinder base for quick, easy cleaning proof plate and replaceable liners for effective peeling
- Long lasting, rust
- Suitable for kitchens with single phase power supply
- WRAS approved Class A air break and brass spray nozzle to prevent water escape
- Thicker peeling plate delivers longer operating life
- Suitable for small to medium kitchens with single phase power supply

IMC MF5 COUNTER-TOP VEGETABLE PEELER - 1 PHASE - W 366 MM - 0.25 KW

MODEL: F59/500

WEIGHTS & DIMENSIONS

Product Width	366 mm
Product Depth	519 mm
Product Height	634 mm
Product Dimensions (WxDxH) (mm)	366 Millimeter X 519 Millimeter X 634 Millimeter

SHIPPING DETAILS

Ship Width	51 cm
Ship Depth	39 cm
Ship Height	60 cm
Ship Weight	33 kg
Ship Method	Small Parcel (Ups Fedex Dhl)
Shipping Package Type	Pieces

PRODUCT CERTIFICATION ICONS

Made in UK UK CA IP55

ENERGY SPECIFICATIONS

Primary Energy Type	Electric
Electrical Volts	230V

ADDITIONAL TECHNICAL SPECIFICATIONS

Hopper Load	5
Motor Power	0.33

bidding specifications

IMC reserves the right to modify specifications or discontinue models without incurring obligation. Dimensions nominal.

Document Auto-Generated

IMC MF5 COUNTER-TOP VEGETABLE PEELER - 1 PHASE - W 366 MM - 0.25 KW

MODEL: F59/500

TECHNICAL DRAWING

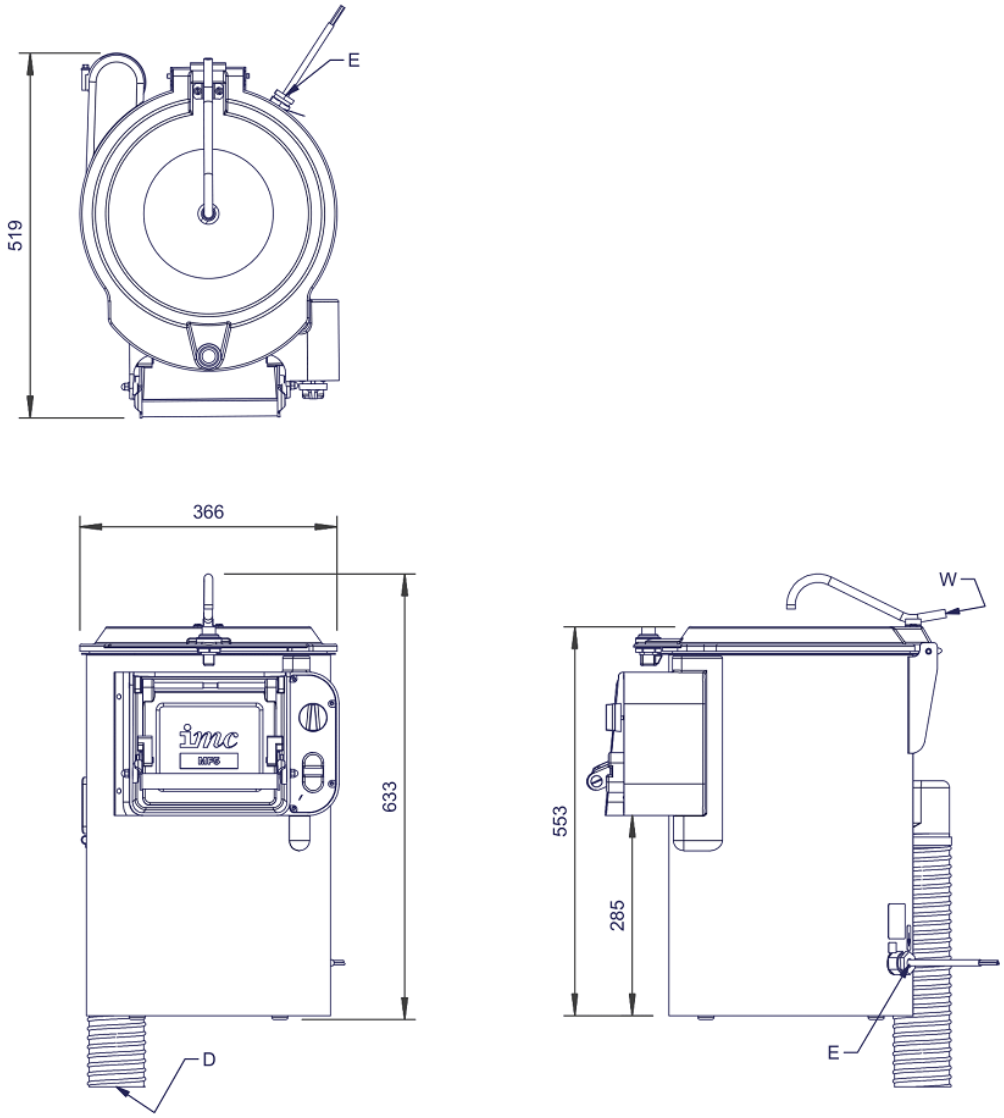

IMC reserves the right to modify specifications or discontinue models without incurring obligation. Dimensions nominal.

Document Auto-Generated