IMC MF15 FREE-STANDING VEGETABLE PEELER - 1 PHASE - W 481 MM - 0.37 KW

MODEL: F59/520

AIA FILE NUMBER:

ITEM NUMBER:



MF MULTI-FUNCTIONAL PEELER

UKThe versatile, energy-efficient MF15 (1PH) is a multi-functional peeler which is ideal for medium to large kitchens, with a single-phase power supply. A variety of plate options means it can be used to wash and peel root vegetables, including potatoes and onions,wash mussels, clams and other bivalve shellfish, and spin salads.

With a thicker peeling plate for long operating life, the MF15 (1PH) is able to peel up to 398kg of vegetables per hour in 15kg batches making it a cost-effective and labour-saving solution.

Easy to operate, the unit comes with an integral stand and removable filter basket. It has an interlocking lid and door for user safety. The MF15 (1PH) has a perspex viewing pane to monitor

PRODUCT OPTIONS AND ACCESSORIES

- S59/164 Carborundum Peeling Plate for MF10/MF10L/MF15/MF15L Vegetable Peeler
- S59/168 Knife Peeling Plate for MF10/MF15 Vegetable Peeler
- S59/166 Onion Peeling Plate for MF10/MF15 Vegetable Peeler
- E72/011 Sink Skip - Stainless Steel - for MF10/MF10L/MF15/MF15L/VQ Peeler

PRODUCT FEATURES

- Able to peel 12kg of potatoes in 2 minutes up to 220kg per hour
- Upright design with small footprint, ideal for medium and large operations
- Low pedestal for quick and easy discharge of potatoes
- Lubricated, heavy duty gearbox makes peeling operation smooth and reliable
- Dual position waste outlets and smooth cylinder base for quick, easy cleaning proof plate and replaceable liners for effective peeling
- Long lasting, rust
- Suitable for kitchens with single phase power supply
- WRAS approved Class A air break and brass spray nozzle to prevent water escape
- Thicker peeling plate delivers longer operating life.
- Suitable for medium to large kitchens with single

Whisby Road, Lincoln, LN6 3QZ, UK
www.lincat.co.uk/brands/imc | p: +44 1522 875500

IMC MF15 FREE-STANDING VEGETABLE PEELER - 1 PHASE - W 481 MM - 0.37 KW

MODEL: F59/520

WEIGHTS & DIMENSIONS

Product Width	481 mm
Product Depth	635 mm
Product Height	1,177 mm
Product Dimensions (WxDxH) (mm)	481 Millimeter X 635 Millimeter X 1177 Millimeter

SHIPPING DETAILS

Ship Width	68 cm
Ship Depth	51 cm
Ship Height	125 cm
Ship Weight	56.65 kg
Ship Method	Small Parcel (Ups Fedex Dhl)
Shipping Package Type	Pieces

PRODUCT CERTIFICATION ICONS



ENERGY SPECIFICATIONS

Primary Energy Type	Electric
Electrical Volts	230V

ADDITIONAL TECHNICAL SPECIFICATIONS

Hopper Load	10
Motor Power	0.5

bidding specifications

IMC reserves the right to modify specifications or discontinue models without incurring obligation. Dimensions nominal.

Document Auto-Generated

IMC MF15 FREE-STANDING VEGETABLE PEELER - 1 PHASE - W 481 MM - 0.37 KW

MODEL: F59/520

TECHNICAL DRAWING

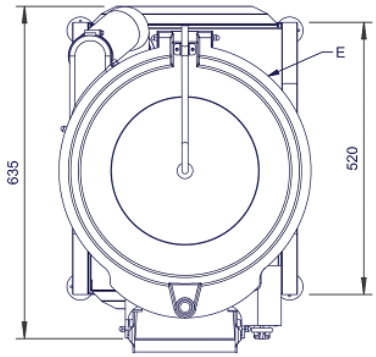

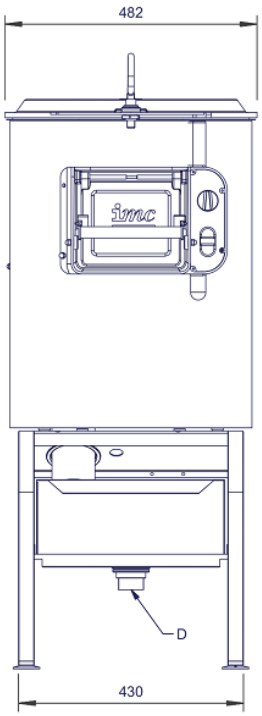

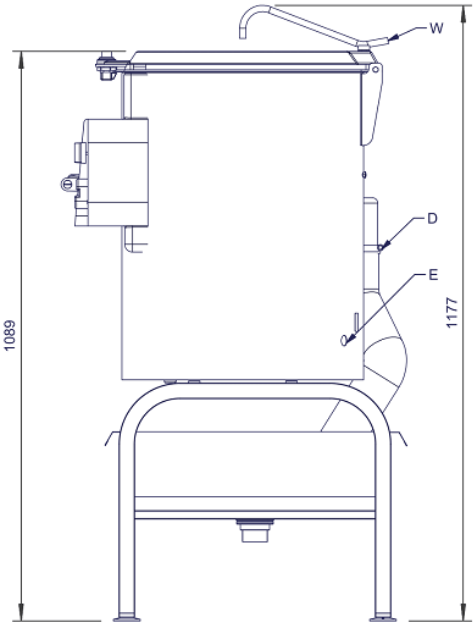

IMC reserves the right to modify specifications or discontinue models without incurring obligation. Dimensions nominal.

Document Auto-Generated