IMC MF10 FREE-STANDING VEGETABLE PEELER - WITH ONION PLATE - 3 PHASE - W 481 MM - 0.37 KW

MODEL: F59/720

AIA FILE NUMBER:

ITEM NUMBER:



MF MULTI-FUNCTIONAL PEELER

UKThe versatile, energy-efficient MF10 Onion Peeler (3PH) is the ideal onion peeler for medium to large kitchens with three-phase power supply.

With a thick peeling plate for long operating life, the MF10 Onion (3PH) is able to peel up to 143.5kg of onions per hour in 10kg batches making it a cost-effective and labour-saving solution. For best results, we recommend onions are topped and tailed before peeling, and hand finished afterwards.

Easy to operate, the unit comes with an integral stand and removable filter basket. It has an interlocking lid and door for user safety. The MF10 Onion (3PH) has a perspex viewing pane to monitor progress, and an adjustable timer for accurate,

PRODUCT OPTIONS AND ACCESSORIES

- S59/166 Onion Peeling Plate for MF10/MF15 Vegetable Peeler

PRODUCT FEATURES

- Able to peel 12kg of potatoes in 2 minutes up to 220kg per hour
- Upright design with small footprint, ideal for medium and large operations
- Low pedestal for quick and easy discharge of potatoes
- Lubricated, heavy duty gearbox makes peeling operation smooth and reliable
- Dual position waste outlets and smooth cylinder base for quick, easy cleaning proof plate and replaceable liners for effective peeling
- Long lasting, rust
- Suitable for kitchens with single phase power supply
- WRAS approved Class A air break and brass spray nozzle to prevent water escape
- Thicker peeling plate delivers longer operating life.
- Suitable for medium to large kitchens with three phase power supply.

IMC MF10 FREE-STANDING VEGETABLE PEELER - WITH ONION PLATE - 3 PHASE - W 481 MM - 0.37 KW

MODEL: F59/720

WEIGHTS & DIMENSIONS

Product Width	481 mm
Product Depth	629 mm
Product Height	1,105 mm
Product Dimensions (WxDxH) (mm)	481 Millimeter X 629 Millimeter X 1105 Millimeter

SHIPPING DETAILS

Ship Width	50 cm
Ship Depth	70 cm
Ship Height	118 cm
Ship Weight	58.8 kg
Ship Method	Small Parcel (Ups Fedex Dhl)
Shipping Package Type	Pieces

PRODUCT CERTIFICATION ICONS

Made in UK UK CA IP55

ENERGY SPECIFICATIONS

Primary Energy Type	Electric
Electrical Volts	400V

ADDITIONAL TECHNICAL SPECIFICATIONS

Hopper Load	10
Motor Power	0.5

bidding specifications

IMC reserves the right to modify specifications or discontinue models without incurring obligation. Dimensions nominal.

Document Auto-Generated

IMC MF10 FREE-STANDING VEGETABLE PEELER - WITH ONION PLATE - 3 PHASE - W 481 MM - 0.37 KW

MODEL: F59/720

TECHNICAL DRAWING

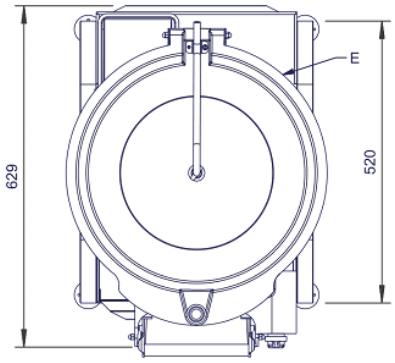

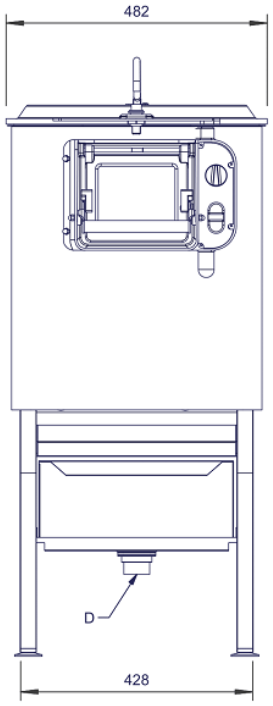

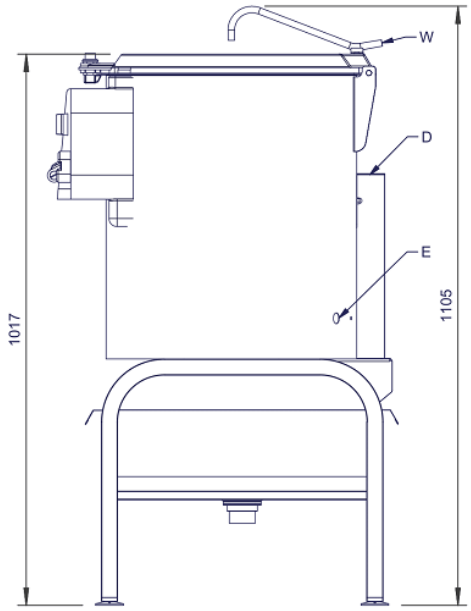

IMC reserves the right to modify specifications or discontinue models without incurring obligation. Dimensions nominal.

Document Auto-Generated