IMC VULTURE 725 IN-TABLING FOOD WASTE DISPOSER - 3 PHASE [4 WIRE] - W 338 MM - 1.1 KW

MODEL: F60/121

AIA FILE NUMBER:

ITEM NUMBER:



Vulture

UKFast and efficient, the 725 Waste Disposer enables medium-sized kitchens to remove waste quickly and simply. It is able to dispose of 400kg of food waste per hour and handles up to 850 covers per sitting, making it ideal for hotels, schools and hospitals.

The 725 Waste Disposer is suitable for medium waste - plate waste, vegetables and peelings, meat and fish scraps, and small bones. Its compact design allows the hopper to be mounted on a table, making it quick and easy to load, saving staff time and labour.

With a smooth stainless steel finish, the 725 Waste Disposer is easy to clean, enabling kitchens to adhere to best hygiene practices. The unit also

PRODUCT FEATURES

- Fast and efficient disposal of up to 400kg of food waste per hour.
- Handles up to 850 covers per sitting ideal for medium size kitchens.
- For medium waste (plate waste, vegetables and peelings, meat and fish scraps).
- Compact design allows hopper to be table mounted, for quick and easy loading.
- Manually reversible motor to extend operational life.
- Suitable for medium kitchens with single phase power supply.
- Suitable for medium kitchens with three phase, four wire power supply.

IMC VULTURE 725 IN-TABLING FOOD WASTE DISPOSER - 3 PHASE [4 WIRE] - W 338 MM - 1.1 KW

MODEL: F60/121

WEIGHTS & DIMENSIONS

Product Width	340 mm
Product Depth	472 mm
Product Height	733 mm
Product Dimensions (WxDxH) (mm)	340 Millimeter X 472 Millimeter X 733 Millimeter

SHIPPING DETAILS

Ship Width	63 cm
Ship Depth	48 cm
Ship Height	104 cm
Ship Weight	43.45 kg
Ship Method	Small Parcel (Ups Fedex Dhl)
Shipping Package Type	Pieces

WATER, PLUMBING, AND DRAINAGE SPECIFICATIONS

Water Inlet Size	15 mm
Water Inlet Pressure	0.4 Bar

PRODUCT CERTIFICATION ICONS

Made in UK UKCA IP55

ENERGY SPECIFICATIONS

Primary Energy Type	Electric
Electrical Volts	400V

ADDITIONAL TECHNICAL SPECIFICATIONS

Meal Waste Servings Processed Per Sitting	850
Motor Power	1.5

bidding specifications

IMC reserves the right to modify specifications or discontinue models without incurring obligation. Dimensions nominal.

Document Auto-Generated

IMC VULTURE 725 IN-TABLING FOOD WASTE DISPOSER - 3 PHASE [4 WIRE] - W 338 MM - 1.1 KW

MODEL: F60/121

TECHNICAL DRAWING

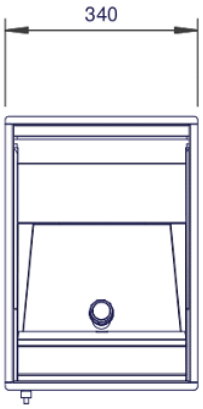

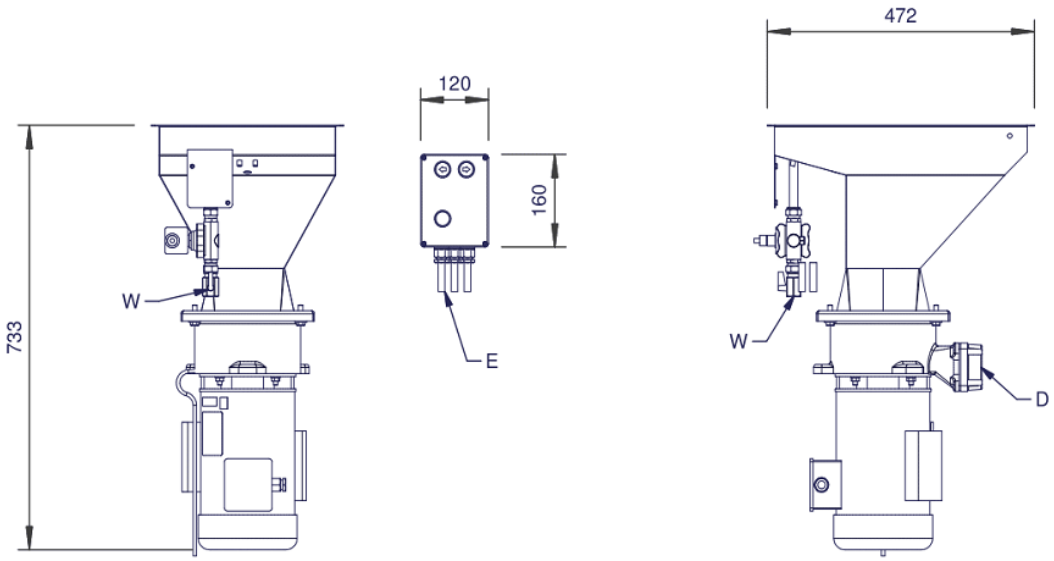

IMC reserves the right to modify specifications or discontinue models without incurring obligation. Dimensions nominal.

Document Auto-Generated