IMC VULTURE 723 UNDER-SINK FOOD WASTE DISPOSER - FITS 89 MM SINK OPENING - 1 PHASE - 1.1 KW

MODEL: F60/305

AIA FILE NUMBER:

ITEM NUMBER:



Vulture

UKFast and efficient, the 723 Waste Disposer enables medium-sized kitchens to remove waste quickly and simply. It is able to dispose of 200kg of food waste per hour and handles up to 400 covers per sitting, making it ideal for hotels, schools and hospitals.

The 723 Waste Disposer is suitable for medium waste - small pork and chicken bones, vegetables and fruit. Its compact design allows mounting under a sink (with a 90mm opening) making it quick and easy to load, saving staff time and labour.

The 723 Waste Disposer is easy to clean, enabling kitchens to adhere to best hygiene practices. Reversible motors extend the 723 Waste Disposer's

PRODUCT FEATURES

- Fast and efficient disposal of up to 200kg of food waste per hour.
- Handles up to 850 covers per sitting ideal for medium size kitchens.
- For medium waste (plate waste, vegetables and peelings, meat and fish scraps).
- Compact design allows hopper to be table mounted, for quick and easy loading.
- Manually reversible motor to extend operational life.
- Suitable for medium kitchens with single phase power supply.
- Manually reversible motor to extend operational life.

IMC VULTURE 723 UNDER-SINK FOOD WASTE DISPOSER - FITS 89 MM SINK OPENING - 1 PHASE - 1.1 KW

MODEL: F60/305

WEIGHTS & DIMENSIONS

Product Width	218 mm
Product Depth	304 mm
Product Height	573 mm
Product Dimensions (WxDxH) (mm)	218 Millimeter X 304 Millimeter X 573 Millimeter

SHIPPING DETAILS

Ship Width	41 cm
Ship Depth	75 cm
Ship Height	50 cm
Ship Weight	30 kg
Ship Method	Small Parcel (Ups Fedex Dhl)
Shipping Package Type	Pieces

WATER, PLUMBING, AND DRAINAGE SPECIFICATIONS

Water Inlet Size	15 mm
Water Inlet Pressure	0.4 Bar

PRODUCT CERTIFICATION ICONS

Made in UK UKCA IP55

ENERGY SPECIFICATIONS

Primary Energy Type	Electric
Electrical Volts	230V

ADDITIONAL TECHNICAL SPECIFICATIONS

Meal Waste Servings Processed Per Sitting	400
Motor Power	1.5

bidding specifications

IMC reserves the right to modify specifications or discontinue models without incurring obligation. Dimensions nominal.

Document Auto-Generated

IMC VULTURE 723 UNDER-SINK FOOD WASTE DISPOSER - FITS 89 MM SINK OPENING - 1 PHASE - 1.1 KW

MODEL: F60/305

TECHNICAL DRAWING

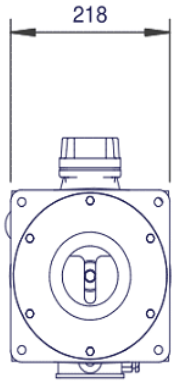

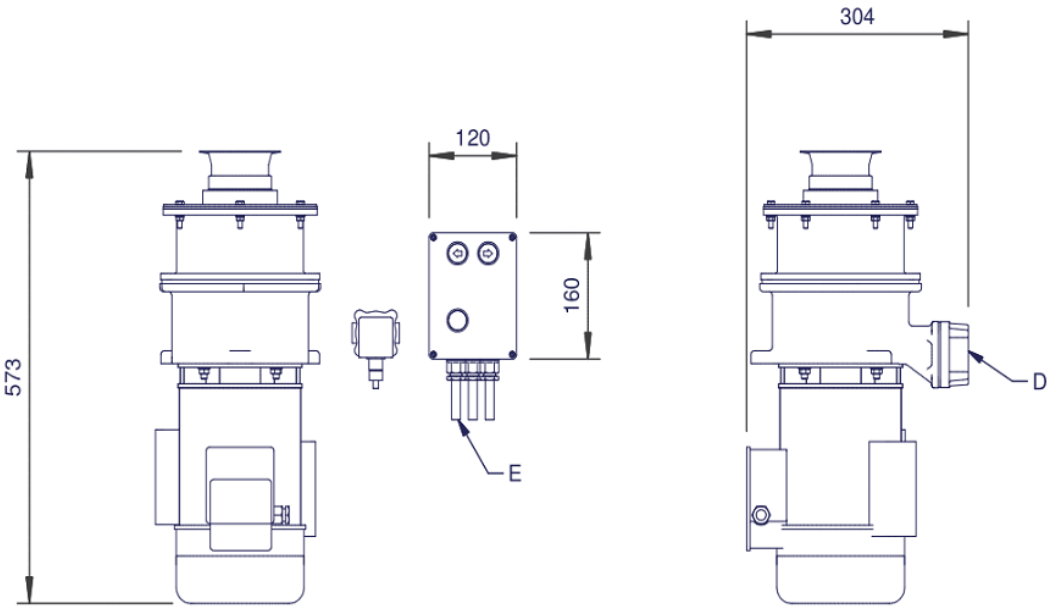

IMC reserves the right to modify specifications or discontinue models without incurring obligation. Dimensions nominal.

Document Auto-Generated