IMC IMCHIP PC2 COUNTER-TOP POTATO CHIPPER - W 370 MM - 0.18 KW [KNIFE BLOCK SIZE TO BE SPECIFIED]

MODEL: F61/220

AIA FILE NUMBER:

ITEM NUMBER:



IMChip

UKPower up your restaurant's chip making capabilities with this ultra-fast IMC Potato Chipper, which can produce 25kg of chips per minute with minimal waste. Designed to ensure short preparation times which in turn reduces costly wage bills and makes for better staff utilisation, the chipper offers interchangeable knife and scallop blocks for choice of chip size. Easy to clean, there are interlocks for operator safety and an easy-to-load hopper.

PRODUCT OPTIONS AND ACCESSORIES

- S61/134 Blades for CS-C1/PC2 Chipper Knife Block - 12 mm x 12 mm [fits S61/135 & S61/145 blocks]
- S61/129 Blades for CS-C1/PC2 Chipper Knife Block - 14 mm x 14 mm [fits S61/114 & S61/151 blocks]
- S61/128 Blades for CS-C1/PC2 Chipper Knife Block - 17 mm x 14 mm [fits S61/115 & S61/144 blocks]
- S61/183 Blades for CS-C1/PC2 Chipper Knife Block - 21 mm x 17 mm [fits S61/182 & S61/184 blocks]
- S61/135 Knife Block - 12 mm x 12 mm - for PC2 Chipper [includes S61/134 Blade]
- S61/114 Knife Block - 14 mm x 14mm - for PC2 Chipper [includes S61/129 Blade]
- S61/115 Knife Block - 17 mm x 14 mm - for PC2 Chipper [includes S61/128 Blade]
- S61/182 Knife Block - 21mm x 17 mm - for PC2 Chipper [includes S61/183 Blade]
- S61/140 Stand for CS-C1/PC2 Chipper

PRODUCT FEATURES

- Able to produce 25kg of chips per minute
- Compact design, with flexible mounting options, to suit kitchens of any size
- Large capacity 12kg hopper allows quick and easy loading
- One piece knife block design for quick and safe cutting, with minimal waste
- Supplied with knife block 12mm, 14mm, 17mm, or 21mm sizes available
- Engineered using heavy gauge stainless steel, for longevity and easy cleaning
- Suitable for medium kitchens with single phase power supply.
- Please specify a knife block at point of ordering chipper

Whisby Road, Lincoln, LN6 3QZ, UK
www.lincat.co.uk/brands/imc | p: +44 1522 875500

IMC IMCHIP PC2 COUNTER-TOP POTATO CHIPPER - W 370 MM - 0.18 KW [KNIFE BLOCK SIZE TO BE SPECIFIED]

MODEL: F61/220

WEIGHTS & DIMENSIONS

Product Width	370 mm
Product Depth	603 mm
Product Height	550 mm
Product Dimensions (WxDxH) (mm)	370 Millimeter X 603 Millimeter X 550 Millimeter

SHIPPING DETAILS

Ship Width	68 cm
Ship Depth	42.5 cm
Ship Height	84 cm
Ship Weight	44 kg
Ship Method	Small Parcel (Ups Fedex Dhl)
Shipping Package Type	Pieces

PRODUCT CERTIFICATION ICONS

Made in UK UK CA IP55

ENERGY SPECIFICATIONS

Primary Energy Type	Electric
Electrical Volts	240V

ADDITIONAL TECHNICAL SPECIFICATIONS

Hopper Load	12
Motor Power	0.24

bidding specifications

IMC reserves the right to modify specifications or discontinue models without incurring obligation. Dimensions nominal.

Document Auto-Generated

IMC IMCHIP PC2 COUNTER-TOP POTATO CHIPPER - W 370 MM - 0.18 KW [KNIFE BLOCK SIZE TO BE SPECIFIED]

MODEL: F61/220

TECHNICAL DRAWING

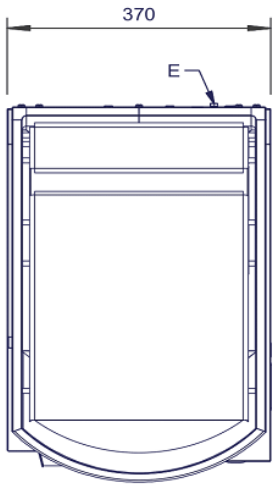

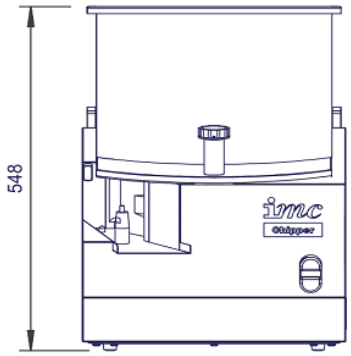

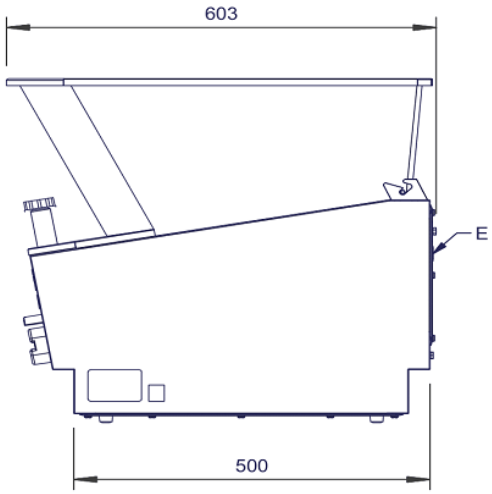

IMC reserves the right to modify specifications or discontinue models without incurring obligation. Dimensions nominal.

Document Auto-Generated