# GAS

## OPEN BURNERS I HOT PLATES 31 3/8”

## IHPA-6-36

**MODEL NUMBERS**

IHPA-2-12
IHPA-4-24
IHPA-6-36
IHPA-8-48
IHPA-10-60

**Large 5” (127 mm) stainless steel landing ledge for convenient plating.**

## OPEN BURNERS

- PyroCentric™ 32,000 BTU (9 KW) anti-clogging burner with a 7,000 BTU/hr. (2 KW) low simmer feature. Two rings of flame for even heating.
- Cast iron PyroCentric burners are standard on all IHPA hot plates.
- Burners are anti-clogging and lift-off and separate for easy cleaning.
- No gaskets or screws.
- One standing pilot per burner for instant ignition.

## GRATES

- Top grates feature 2 sections for easy and safe to lift-off for cleaning.
- Grates have a cast-in bowl that directs heat upward.
- Anti-clogging pilot is designed into the grate to shield the pilots from grease and debris.
- Pots slide easily from section to section and onto landing ledge.
- Grates are cast iron for a long service life.

## EXTERIOR FEATURES

- Stainless steel front, sides and landing ledge for cleanability and professional look.
- Welded and polished stainless steel seams.
- Range Match profile when placed on a refrigerated base or equipment stand.
- Stainless steel landing ledge is ideal for plating.
- Control knobs are durable die cast metal for long life.
- Full width, removable crumb tray for easy cleaning.
- 4” (102 mm) heavy duty legs with adjustable feet.
- One year parts and labor warranty.

1128 Sherborn Street | Corona, CA 92879 | 800.343.7790 | imperialrange.com | imperialsales@imperialrange.com | imperialrange.com

# GAS

## OPEN BURNERS I HOT PLATES 31 3/8”

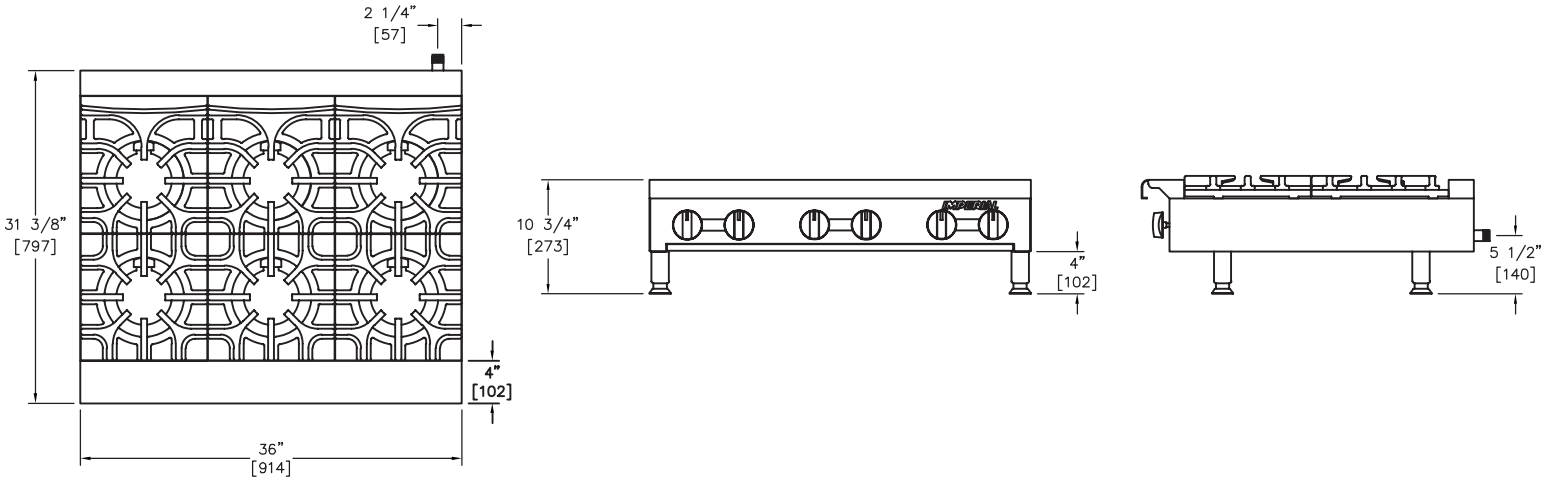


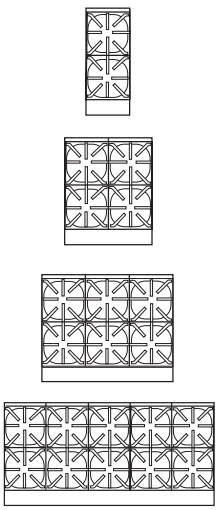

### GAS HOT PLATES - 31-3/8” (797 MM) DEPTH

| WIDTH | MODEL | OPEN BURNERS | GAS OUTPUT | | SHIP WEIGHT | |
|---|---|---|---|---|---|---|
| | | | BTU | KW | KG | LBS |
| 12” (305) | IHPA-2-12 | 2 | 64,000 | 19 | 37 | 80 |
| 24”(610) | IHPA-4-24 | 4 | 128,000 | 38 | 64 | 140 |
| 36” (914) | IHPA-6-36 | 6 | 192,000 | 56 | 95 | 210 |
| 48” (1219) | IHPA-8-48 | 8 | 256,000 | 75 | 123 | 270 |
| 60” (1524) | IHPA-10-60 | 10 | 320,000 | 94 | 147 | 325 |

| MODEL | DIMENSIONS | CRATED DIMENSIONS |
|---|---|---|
| IHPA-2-12 | 12” W X 31-3/8” D X 10-3/4” H (305 X 797 X 273 MM) | 14-1/2" W X 34" D X 12" H (368 X 864 X 305 MM) |
| IHPA-4-24 | 24" W X 31-3/8" D X 10-3/4" H (610 X 797 X 273 MM) | 26-1/2” W X 34” D X 12” H (673 X 864 X 305 MM) |
| IHPA-6-36 | 36" W X 31-3/8" D X 10-3/4" H (914 X 797 X 273 MM) | 38-1/2” W X 34” D X 12” H (978 X 864 X 305 MM) |
| IHPA-8-48 | 48" W X 31-3/8" D X 10-3/4" H (1219 X 797 X 273 MM) | 50-1/2” W X 34” D X 12” H (1283 X 864 X 305 MM) |
| IHPA-10-60 | 60” W X 31-3/8” D X 10-3/4” H (1524 X 797 X 273 MM) | 62-1/2” W X 34” D X 12” H (1588 X 864 X 305 MM) |

### OPTIONS AND ACCESSORIES

- Stainless steel equipment stands
- 6” (152 mm) casters for equipment stands
- 10” (254 mm) stainless steel wok ring
- Saute burner head, interchangeable
- Wok burner head, interchangeable
- Gas shut off valve 3/4” N.P.T
- Quick disconnect and flexible gas hose 3/4” N.P.T

### CLEARANCE REQUIREMENTS

Provide 0” clearance from non-combustible surfaces and 8” (203 mm) from combustible surfaces.

| MANIFOLD PRESSURE | | |
|---|---|---|
| NATURAL GAS | PROPANE GAS | MANIFOLD SIZE |
| 5.0” W.C. | 10.0” W.C. | 3/4” (19 MM) |

1128 Sherborn Street | Corona, CA 92879 | 800.343.7790 | imperialrange.com | imperialsales@imperialrange.com | imperialrange.com