LINCAT SILVERLINK ELECTRIC COUNTER-TOP ADJUSTABLE SALAMANDER GRILL - W 600 MM - 4.5 KW

MODEL: AS4



UKFast and convenient, the Silverlink 600 Electric Adjustable Salamander allows you to alter the height of the unit so that you can grill and toast your way. The Salamander, which comes with added power, is 1/1 gastronorm compatible and features a smooth action and easy-lift grill hood. Great for cafes, pubs and restaurants, the Salamander is designed to plug in and play, which means you'll be creating mouthwatering meals in no time. It comes with a chromed toasting rack and removable fat collection tray for easy cleaning.

AIA FILE NUMBER:

ITEM NUMBER:

PRODUCT OPTIONS AND ACCESSORIES

- BR51 AS4 & AS3 WALL BRACKET

PRODUCT FEATURES

- Higher powered
- Ideal for the grilling and gratinating of a range of food types 1/1 gastronorm compatible for convenience in use
- Smooth action and easy lift grill hood
- The height markings and audible timer ensures consistent results every time
- Chromed toasting rack included
- Removable fat collection tray is included to make cleaning easier

Whisby Road, Lincoln, LN6 3QZ, UK
www.lincat.co.uk | p: +44 1522 875500

LINCAT SILVERLINK ELECTRIC COUNTER-TOP ADJUSTABLE SALAMANDER GRILL - W 600 MM - 4.5 KW

MODEL: AS4

WEIGHTS & DIMENSIONS

Product Width	600 mm
Product Depth	472 mm
Product Height	500 mm
Product Dimensions (WxDxH) (mm)	600 Millimeter X 472 Millimeter X 500 Millimeter
Product Weight	45 kg
Product Clearance Required: Top	500 mm
Product Clearance Required: Back	300 mm
Product Clearance Required: Left Side	300 mm

SHIPPING DETAILS

Ship Width	70.3 cm
Ship Depth	70.3 cm
Ship Height	102.3 cm
Ship Weight	49.5 kg
Ship Method	Small Parcel (Ups Fedex Dhl)
Shipping Package Type	Pieces

PRODUCT CERTIFICATION ICONS

IP23 UK CA Made in UK

ENERGY SPECIFICATIONS

Primary Energy Type	Electric
Electrical Volts	230V

ADDITIONAL TECHNICAL SPECIFICATIONS

Cooking Area Plate Depth	340

bidding specifications

Lincat reserves the right to modify specifications or discontinue models without incurring obligation. Dimensions nominal.

Document Auto-Generated

LINCAT SILVERLINK ELECTRIC COUNTER-TOP ADJUSTABLE SALAMANDER GRILL - W 600 MM - 4.5 KW

MODEL: AS4

TECHNICAL DRAWING

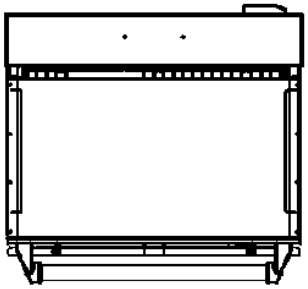

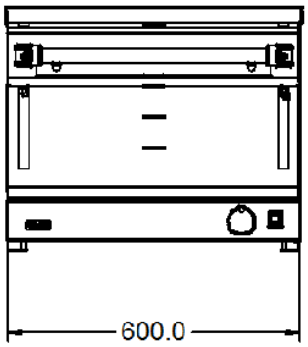

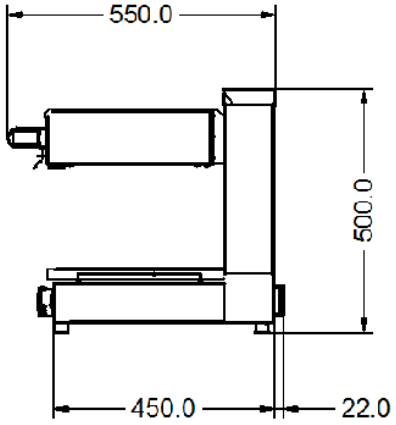

Lincat reserves the right to modify specifications or discontinue models without incurring obligation. Dimensions nominal.

www.lincat.co.uk | p: +44 1522 875500 Whisby Road, Lincoln, LN6 3QZ, UK