LINCAT SILVERLINK ELECTRIC COUNTER-TOP BAIN MARIE - DRY HEAT - GASTRONORMS - BASE + DISH PACK - W 450 MM - 0.75 KW

MODEL: BM4A

AIA FILE NUMBER:

ITEM NUMBER:



SILVERLINK 600

UKDo you need to safely hold sauces, soups, gravy and precooked foods for up to two hours at the ideal serving temperature? This Silverlink 600 Electric Dry Heat Bain Marie does just that. Perfect for takeaways, restaurants and mobile caterers, the bain marie is designed to plug in and play so you'll be serving delicious dishes in no time. With 2 x 1/2 150mm deep gastronorms and lids included, the unit also comes with an adjustable temperature control.

PRODUCT OPTIONS AND ACCESSORIES

- CC4 Lincat Silverlink 600 Free-standing Ambient Open-Top Pedestal with Doors - W 450 mm
- CN4 Lincat Silverlink 600 Free-standing Ambient Open-Top Pedestal without Doors - W 450 mm
- SLS4 Lincat Silverlink 600 Free-standing Floor Stand - for units W 450 mm
- HC4 Lincat Silverlink 600 Free-standing Heated Open-Top Pedestal with Doors - W 450 mm - 0.5 kW
- HCL4 Lincat Silverlink 600 Free-standing Heated Pedestal with Legs and Doors - W 450 mm - 0.5 kW

PRODUCT FEATURES

- Dry heat bain marie
- Ideal for holding foods for up to 2 hours at serving temperature
- 2x 1/2 150mm deep gastronorms with lids are included
- Plug and play for an easy installation
- Perfect for safely holding sauces, gravy & pre cooked foods
- Adjustable temperature control

LINCAT SILVERLINK ELECTRIC COUNTER-TOP BAIN MARIE - DRY HEAT - GASTRONORMS - BASE + DISH PACK - W 450 MM - 0.75

MODEL: BM4A

WEIGHTS & DIMENSIONS

Product Width	450 mm
Product Depth	600 mm
Product Height	290 mm
Product Dimensions (WxDxH) (mm)	450 Millimeter X 600 Millimeter X 290 Millimeter

SHIPPING DETAILS

Ship Width	70 cm
Ship Depth	55 cm
Ship Height	49.5 cm
Ship Weight	14.85 kg
Ship Method	Small Parcel (Ups Fedex Dhl)
Shipping Package Type	Pieces

PRODUCT CERTIFICATION ICONS

Made in UK UK CA IP33

ENERGY SPECIFICATIONS

Primary Energy Type	Electric
Electrical Volts	230V

bidding specifications

Lincat reserves the right to modify specifications or discontinue models without incurring obligation. Dimensions nominal.

Document Auto-Generated

LINCAT SILVERLINK ELECTRIC COUNTER-TOP BAIN MARIE - DRY HEAT - GASTRONORMS - BASE + DISH PACK - W 450 MM - 0.75

MODEL: BM4A

TECHNICAL DRAWING

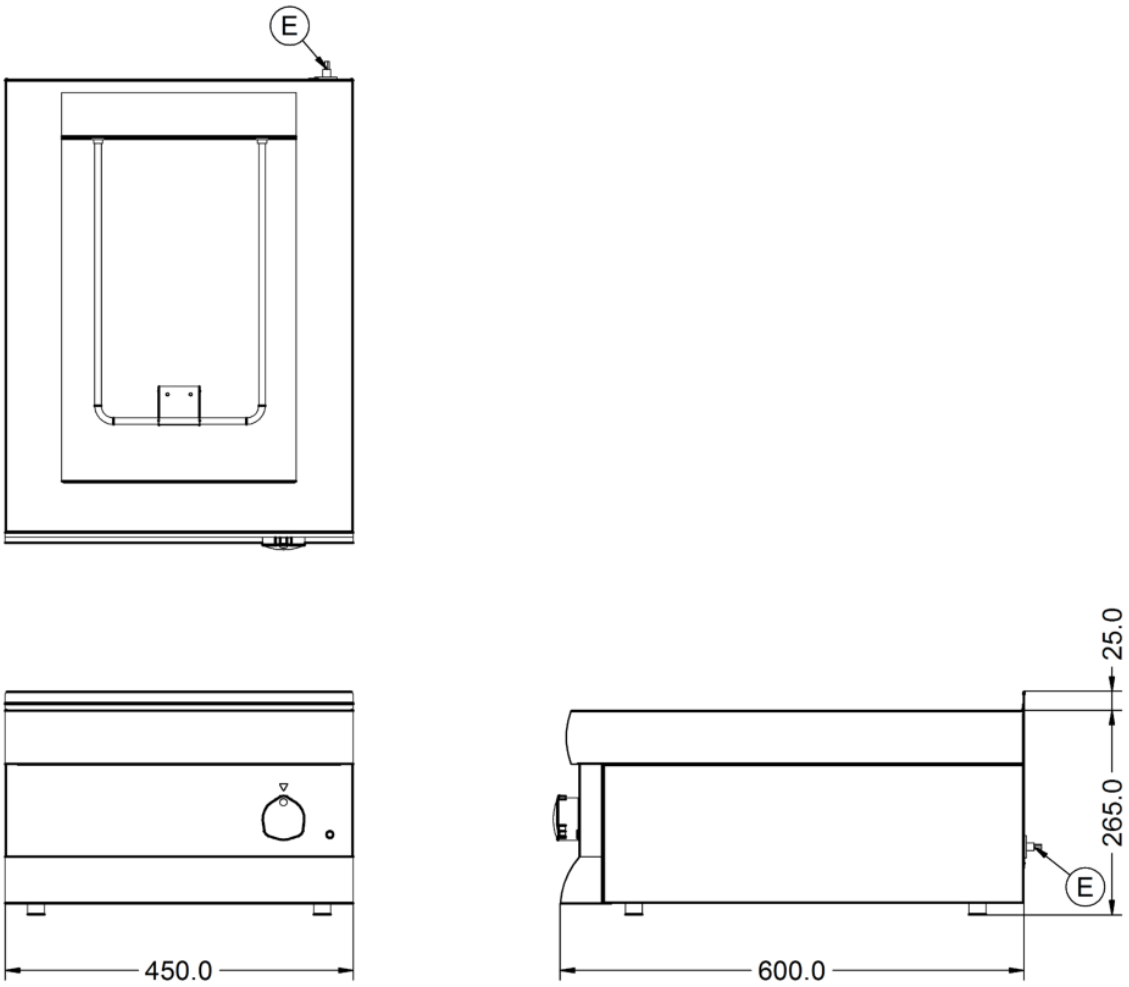

Lincat reserves the right to modify specifications or discontinue models without incurring obligation. Dimensions nominal.

Document Auto-Generated