LINCAT SILVERLINK ELECTRIC COUNTER-TOP BAIN MARIE - WET HEAT - GASTRONORMS - BASE ONLY - W 750 MM - 2.0 KW

MODEL: BM7W

AIA FILE NUMBER:

ITEM NUMBER:



SILVERLINK 600

UKDo you need to safely hold sauces, soups, gravy and precooked foods for up to two hours at the ideal serving temperature? This Silverlink 600 Electric Wet Heat Bain Marie does just that. Perfect for takeaways, restaurants and mobile caterers, the unit, which can also be used as a dry bain marie, is designed to plug in and play so you'll be serving delicious dishes in no time. It also comes with an adjustable temperature control.

PRODUCT OPTIONS AND ACCESSORIES

- CC7 Lincat Silverlink 600 Free-standing Ambient Open-Top Pedestal with Doors - W 750 mm
- CN7 Lincat Silverlink 600 Free-standing Ambient Open-Top Pedestal without Doors - W 750 mm
- SLS7 Lincat Silverlink 600 Free-standing Floor Stand - for units W 750 mm
- HC7 Lincat Silverlink 600 Free-standing Heated Open-Top Pedestal with Doors - W 750 mm - 0.5 kW
- HCL7 Lincat Silverlink 600 Free-standing Heated Pedestal with Legs and Doors - W 750 mm - 0.75 kW

PRODUCT FEATURES

- Wet heat bain marie
- Ideal for holding foods for up to 2 hours at serving temperature
- Base unit only supplied empty no gastronorms included
- This wet unit can also be used as a dry bain marie
- Plug and play for an easy installation
- Perfect for safely holding sauces, gravy & pre cooked foods
- Adjustable temperature control

Whisby Road, Lincoln, LN6 3QZ, UK
www.lincat.co.uk | p: +44 1522 875500

LINCAT SILVERLINK ELECTRIC COUNTER-TOP BAIN MARIE - WET HEAT - GASTRONORMS - BASE ONLY - W 750 MM - 2.0 KW

MODEL: BM7W

WEIGHTS & DIMENSIONS

Product Width	750 mm
Product Depth	600 mm
Product Height	290 mm
Product Dimensions (WxDxH) (mm)	750 Millimeter X 600 Millimeter X 290 Millimeter

SHIPPING DETAILS

Ship Width	85.5 cm
Ship Depth	70 cm
Ship Height	49.5 cm
Ship Weight	18.26 kg
Ship Method	Small Parcel (Ups Fedex Dhl)
Shipping Package Type	Pieces

PRODUCT CERTIFICATION ICONS

Made in UK UK CA IP33

ENERGY SPECIFICATIONS

Primary Energy Type	Electric
Electrical Volts	230V

bidding specifications

Lincat reserves the right to modify specifications or discontinue models without incurring obligation. Dimensions nominal.

Document Auto-Generated

LINCAT SILVERLINK ELECTRIC COUNTER-TOP BAIN MARIE - WET HEAT - GASTRONORMS - BASE ONLY - W 750 MM - 2.0 KW

MODEL: BM7W

TECHNICAL DRAWING

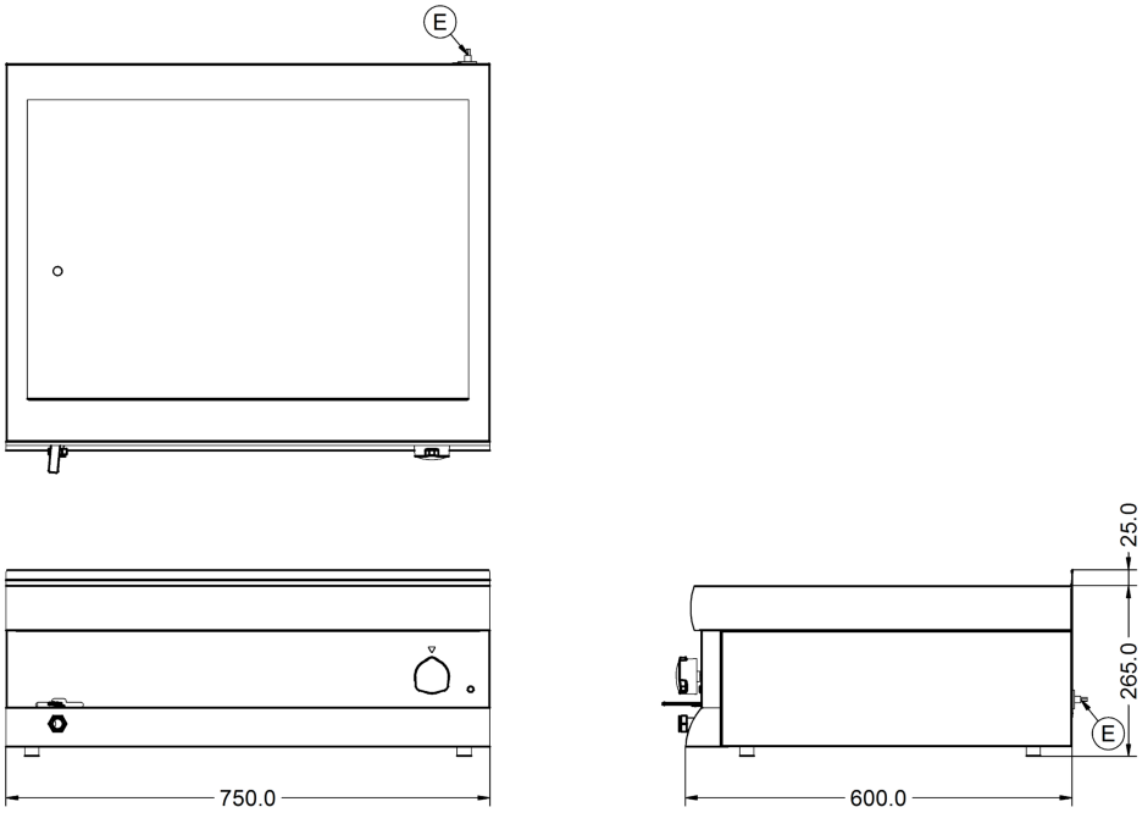

Lincat reserves the right to modify specifications or discontinue models without incurring obligation. Dimensions nominal.

Document Auto-Generated