LINCAT SEAL 650 SERIES COUNTER-TOP CURVED FRONT HEATED MERCHANDISER - BACK-SERVICE - W 750 MM - 1.52 KW

MODEL: C6H/75B



SEAL

UKKeep hot meats, pasties, pies and other foods at the perfect temperature with the Seal 650 Range Curved Front Heated Merchandiser. Perfect for a front of house setting in large cafes or canteens, the merchandiser boasts great all-round visibility to entice customers and maximise food sales potential, and is easily accessed from the back of the unit. There's a precise thermostatic control up to 95°C with a digital display of cabinet temperature which ensures food is maintained at a safe temperature, and a humidity feature prevents food from drying out, meaning that food stays in optimum condition for longer, thereby reducing waste.

AIA FILE NUMBER:

ITEM NUMBER:

PRODUCT FEATURES

- Elegant curved design with extruded aluminium frames and metallic silver finish enhances display without detracting from the contents
- Minimum food holding temperature of 72Â°C
- All round visibility to maximise food sales potential
- Precise thermostatic control up to 95Â°C with digital display of cabinet temperature ensures food is maintained at a safe temperature
- Precise thermostatic control up to 95Â°C with digital display of cabinet temperature ensures food is maintained at a safe temperature
- Humidity feature prevents food drying out food stays in optimum condition for longer, reducing waste
- Daylight balanced illumination to enhance display of contents with easy change clip in fluorescent light tubes

LINCAT SEAL 650 SERIES COUNTER-TOP CURVED FRONT HEATED MERCHANDISER - BACK-SERVICE - W 750 MM - 1.52 KW

MODEL: C6H/75B

WEIGHTS & DIMENSIONS

Product Width	750 mm
Product Depth	650 mm
Product Height	755 mm
Product Dimensions (WxDxH) (mm)	750 Millimeter X 650 Millimeter X 755 Millimeter

SHIPPING DETAILS

Ship Width	100 cm
Ship Depth	85 cm
Ship Height	89 cm
Ship Weight	60.5 kg
Ship Method	Small Parcel (Ups Fedex Dhl)
Shipping Package Type	Pieces

PRODUCT CERTIFICATION ICONS

Made in UK UKCA IP33

ENERGY SPECIFICATIONS

Primary Energy Type	Electric
Electrical Volts	230V

ADDITIONAL TECHNICAL SPECIFICATIONS

Shelf Depth	525
Shelf Width	650

bidding specifications

Lincat reserves the right to modify specifications or discontinue models without incurring obligation. Dimensions nominal.

Document Auto-Generated

LINCAT SEAL 650 SERIES COUNTER-TOP CURVED FRONT HEATED MERCHANDISER - BACK-SERVICE - W 750 MM - 1.52 KW

MODEL: C6H/75B

TECHNICAL DRAWING

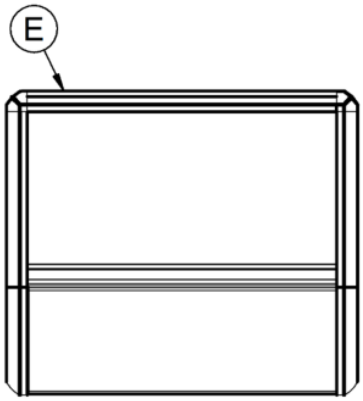

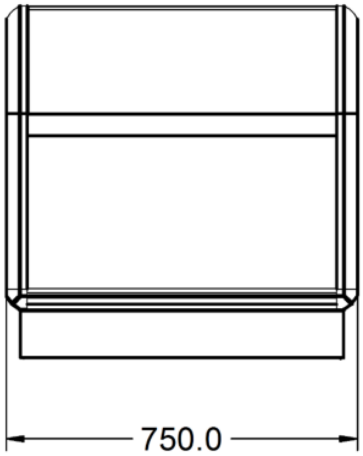

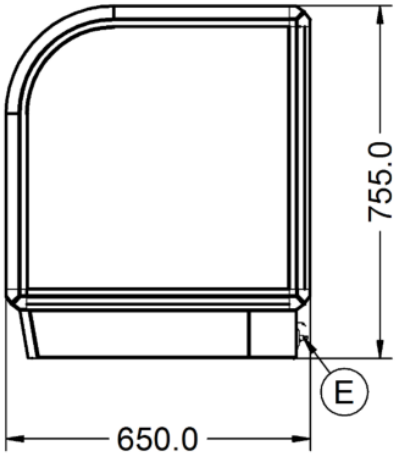

Lincat reserves the right to modify specifications or discontinue models without incurring obligation. Dimensions nominal.

Document Auto-Generated