LINCAT SILVERLINK NATURAL GAS COUNTER-TOP CHARGRILL - W 450 MM - 16.4 KW

MODEL: CG4/N



SILVERLINK 600

UKCreate that distinctive chargrilled flavour and branded appearance without the need for messy lava rocks with the Silverlink 600 Gas Chargrill. Utlising innovative radiants instead, the chargrill experience is much cleaner, while the twin zones make for maximum flexibility. The variable heat control and heat retaining cooking grids produce the clean, sharp chargrilled marks that will make your dishes even more appetizing. It's perfect for cafes, bars and restaurants.

AIA FILE NUMBER:

ITEM NUMBER:

PRODUCT OPTIONS AND ACCESSORIES

- CG4/N CH01 CATERFLEX HOSE 1/2" 1 METRE
- CG4/N CH02 CATERFLEX HOSE 1/2" 1.5 METRE
- CG4/N CN4 Lincat Silverlink 600 Free-standing Ambient Open-Top Pedestal without Doors - W 450 mm
- CG4/N SLS4 Lincat Silverlink 600 Free-standing Floor Stand - for units W 450 mm

PRODUCT FEATURES

- Uses radians which replaces the need for using messy lava rocks
- Twin zones for maximum flexibility
- The variable heat control and heat retaining cooking grids produce the clean, sharp chargrilled marks
- Splashguard to project surrounding surfaces from splashes
- Removable branding bars to allow for easy cleaning and access
- Drip draw to collect all the cooking liquids to reduce cleaning times

LINCAT SILVERLINK NATURAL GAS COUNTER-TOP CHARGRILL - W 450 MM - 16.4 KW

MODEL: CG4/N

WEIGHTS & DIMENSIONS

Product Width	450 mm
Product Depth	652 mm
Product Height	414 mm
Product Dimensions (WxDxH) (mm)	450 Millimeter X 652 Millimeter X 414 Millimeter
Product Weight	27 kg
Product Clearance Required: Top	1,000 mm
Product Clearance Required: Back	50 mm
Product Clearance Required: Left Side	50 mm

SHIPPING DETAILS

Ship Width	70 cm
Ship Depth	55 cm
Ship Height	63.5 cm
Ship Weight	29.7 kg
Ship Method	Small Parcel (Ups Fedex Dhl)
Shipping Package Type	Pieces

PRODUCT CERTIFICATION ICONS

ENERGY SPECIFICATIONS

Primary Energy Type	Gas
Electrical Total Wattage	16,400
Electrical Kilowatts	16.4
Number of Electrical Conductor Wires	1

ADDITIONAL TECHNICAL SPECIFICATIONS

Base Type	Not Applicable
Cooking Area Plate Depth	440
Cooking Area Plate Width	375
Food Production Rate	70 x 115g [4oz] burgers [frozen] per hour

bidding specifications

Lincat reserves the right to modify specifications or discontinue models without incurring obligation. Dimensions nominal.

Document Auto-Generated

LINCAT SILVERLINK NATURAL GAS COUNTER-TOP CHARGRILL - W 450 MM - 16.4 KW

MODEL: CG4/N

TECHNICAL DRAWING

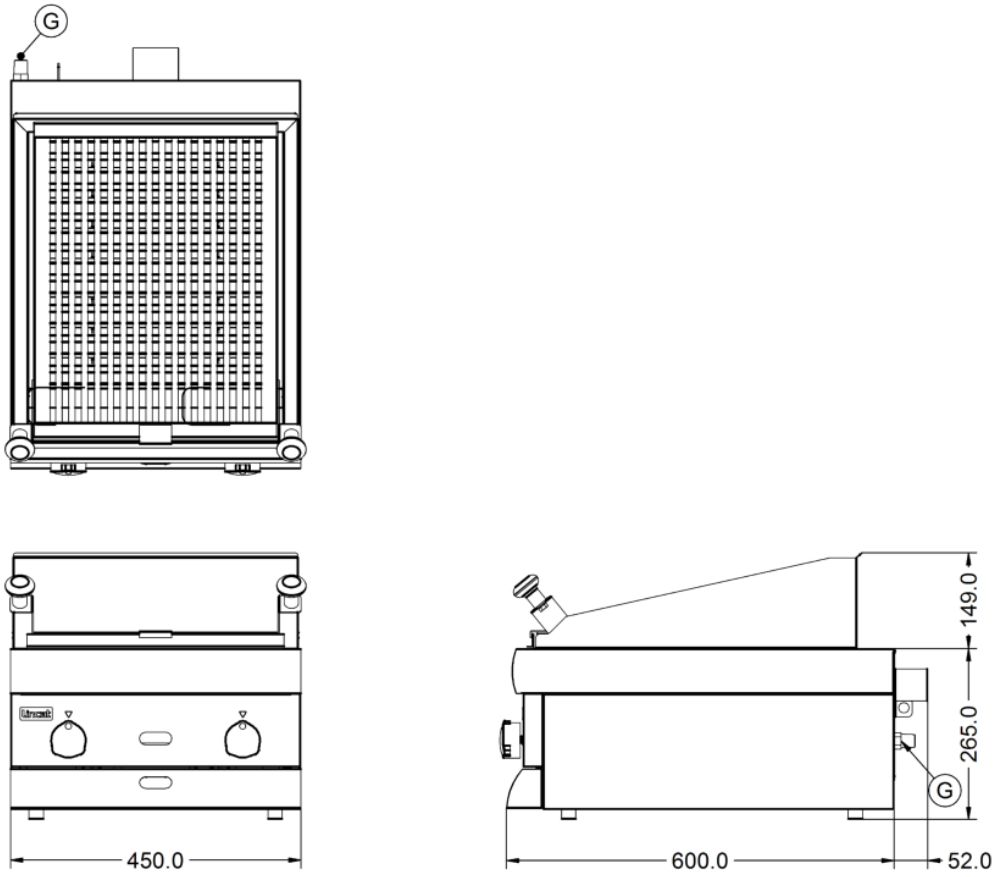

Lincat reserves the right to modify specifications or discontinue models without incurring obligation. Dimensions nominal.

Document Auto-Generated