LINCAT SILVERLINK ELECTRIC COUNTER-TOP SINGLE TANK FRYER - 1 BASKET - W 300 MM - 9.0 KW

MODEL: DF39

AIA FILE NUMBER:

ITEM NUMBER:



SILVERLINK 600

UKDeliver perfectly crisp on the outside and fluffy on the inside chips time after time with the Silverlink 600 Free Standing Electric Fryer. Two independently operated fryer tanks means you have greater versatility while cooking, with a power that delivers 52kg of chips an hour. Ideal for cafes, pubs and restaurants, the fryer is built from sturdy stainless steel, while the heavy duty nickel plated baskets are designed for the most demanding of operations. You're in control via the accurate thermostat throughout the entire cooking process, and hinged elements give easy access during cleaning. Then there's the innovative deep cool zone, which collects cooking debris to prolong the life of the oil and therefore save you money.

PRODUCT OPTIONS AND ACCESSORIES

- BA96 BASKET SPUN DFSMALL
- CC3 Lincat Silverlink 600 Free-standing Ambient Open-Top Pedestal with Doors - W 300 mm
- CN3 Lincat Silverlink 600 Free-standing Ambient Open-Top Pedestal without Doors - W 300 mm
- SLS3 Lincat Silverlink 600 Free-standing Floor Stand - for units W 300 mm
- HC3 Lincat Silverlink 600 Free-standing Heated Open-Top Pedestal with Doors - W 300 mm - 0.25 kW
- HCL3 Lincat Silverlink 600 Free-standing Heated Pedestal with Legs and Doors - W 300 mm - 0.25 kW

PRODUCT FEATURES

- Two independently operated fryer tanks for greater versatility, delivers 52kg of chips per hour
- Front mounted controls for safety
- Hinged elements to give easy access during cleaning
- Cool zone collects cooking debris gives cleaner cooking results and saves money by prolonging the life of the oil
- Thermostatically controlled to give accurate cooking temperatures throughout cooking. Fail safe top temperature cut out ensures safe operation.
- Thermostatically controlled to give accurate cooking temperatures throughout cooking. Fail safe top temperature cut out ensures safe operation.
- Fully moulded 304 stainless steel tank and heavy duty nickel plated baskets for the most demanding of operations
- Front drain off tap for easy removal of cooking oil

LINCAT SILVERLINK ELECTRIC COUNTER-TOP SINGLE TANK FRYER - 1 BASKET - W 300 MM - 9.0 KW

MODEL: DF39

WEIGHTS & DIMENSIONS

Product Width	300 mm
Product Depth	632 mm
Product Height	330 mm
Product Dimensions (WxDxH) (mm)	300 Millimeter X 632 Millimeter X 330 Millimeter
Product Weight	14 kg
Product Clearance Required: Top	1,000 mm
Product Clearance Required: Back	100 mm
Product Clearance Required: Left Side	100 mm

SHIPPING DETAILS

Ship Width	70 cm
Ship Depth	40 cm
Ship Height	49.5 cm
Ship Weight	16.06 kg
Ship Method	Small Parcel (Ups Fedex Dhl)
Shipping Package Type	Pieces

PRODUCT CERTIFICATION ICONS

Made in UK UKCA IP33

ENERGY SPECIFICATIONS

Primary Energy Type	Electric
Electrical Volts	230-400V

ADDITIONAL TECHNICAL SPECIFICATIONS

Basket Lift Type	Not Applicable
Food Production Rate	26kg chips - 12mm [frozen], 30kg chips - 12mm [chilled] per hour
Temperature Maximum	190 °C
Total Oil Capacity (volume)	9 l
Vat 1 Oil Capacity (volume)	9 l

bidding specifications

Lincat reserves the right to modify specifications or discontinue models without incurring obligation. Dimensions nominal.

Document Auto-Generated

LINCAT SILVERLINK ELECTRIC COUNTER-TOP SINGLE TANK FRYER - 1 BASKET - W 300 MM - 9.0 KW

MODEL: DF39

TECHNICAL DRAWING

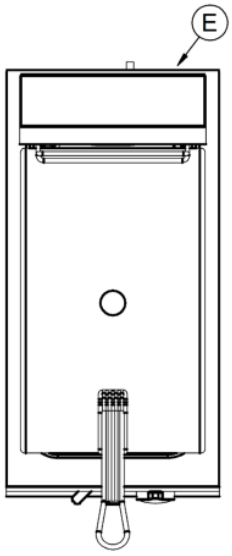

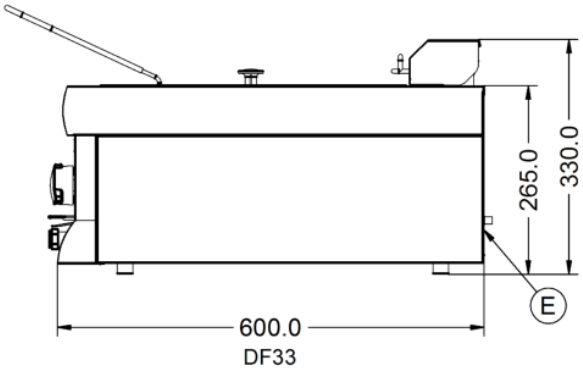

DF33

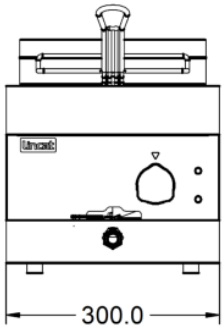

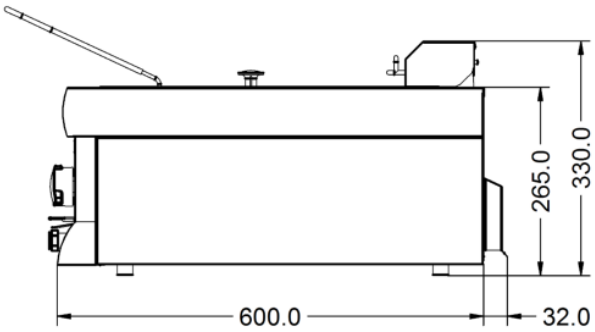

DF36, DF39

Lincat reserves the right to modify specifications or discontinue models without incurring obligation. Dimensions nominal.

Document Auto-Generated