LINCAT SILVERLINK ELECTRIC COUNTER-TOP SINGLE TANK FRYER - 2 BASKETS - W 450 MM - 9.0 KW

MODEL: DF49

SILVERLINK 600

Fry perfectly crispy and fluffy chips every time with the powerful Silverlink 600 Electric Single Tank Counter Top Fryer. With high power capable of delivering 30kg of chips per hour, the fryer comes with two baskets which gives you the flexibility of cooking different foods or loads simultaneously. It's ideal for mobile operations as well as cafes, pubs and restaurants. The fryer features an innovative deep cool zone, which collects cooking debris to prolong the life of the oil and therefore save you money. Sturdy stainless steel means it's built to last, hinged elements give easy access during cleaning, and you're in control via the accurate thermostat throughout the entire cooking process.

AIA FILE NUMBER:

ITEM NUMBER:

PRODUCT OPTIONS AND ACCESSORIES

- BA96 BASKET SPUN DFSMALL
- DC03 DONUT KIT FOR DF46
- CC4 Lincat Silverlink 600 Free-standing Ambient Open-Top Pedestal with Doors - W 450 mm
- CN4 Lincat Silverlink 600 Free-standing Ambient Open-Top Pedestal without Doors - W 450 mm
- SLS4 Lincat Silverlink 600 Free-standing Floor Stand - for units W 450 mm
- HC4 Lincat Silverlink 600 Free-standing Heated Open-Top Pedestal with Doors - W 450 mm - 0.5 kW
- HCL4 Lincat Silverlink 600 Free-standing Heated Pedestal with Legs and Doors - W 450 mm - 0.5 kW

PRODUCT FEATURES

- Higher powered, single tank fryer with two baskets giving you the flexibility to cook different foods or loads simultaneously, delivering 30kg of chips per hour
- Front mounted controls for safety
- Hinged elements to give easy access during cleaning
- Cool zone collects cooking debris - gives cleaner cooking results and saves money by prolonging the life of the oil
- Thermostatically controlled to give accurate cooking temperatures throughout cooking. Fail-safe top temperature cut out ensures safe operation.
- Fully moulded 304 stainless steel tank and heavy duty nickel plated baskets for the most demanding of operations
- Front drain off tap for easy removal of cooking oil

LINCAT SILVERLINK ELECTRIC COUNTER-TOP SINGLE TANK FRYER - 2 BASKETS - W 450 MM - 9.0 KW

MODEL: DF49

WEIGHTS & DIMENSIONS

Width	450 mil
Depth	632 mil
Height	330 mil
Weight	17.2 kg

SHIPPING DETAILS

Ship Width	70 cm
Ship Depth	55 cm
Ship Height	49.5 cm
Ship Weight	18.92 kg
Ship Method	Small Parcel (FedEx, UPS, DHL)
Shipping Package Type	Pieces
Shipping Origin Zip Code	LN6 3QZ, UNITED KINGDOM
Quick Ship Product	No

PRODUCT CERTIFICATIONS

Made in UK UKCA IP33

ENERGY SPECS

Primary Energy Type	Electric
Electrical Amps Per Conductor	Single Phase 39/Three Phase L1=13.0; L2=13.0; L3=13.0
Electrical Total Amperage	39 A
Electrical Volts	230-400V
Electrical Total Wattage	9000 W
Electrical Kilowatts	9 kW
Electrical Plug Type	Hardwired
Number of Electrical Plugs	2
Electrical Connection Type	Direct Hardwired
Number of Electrical Conductor Wires	1
Electrical Remarks	Single,Three

ADDITIONAL SPECIFICATIONS

Auto Oil Top-Off	No
Basket Lift Type	Not Applicable
Construction Materials	Stainless Steel
Control Type	Rotary Control Knob
Food Production Rate	26kg chips - 12mm [frozen], 30kg chips - 12mm [chilled] per hour
Fryer Type	Open Pot
Integrated Filtration	No
Number of Baskets	2
Number of Vats (batteries)	1
Total Oil Capacity (volume)	15 l
Oil Reclamation	No
Oil Temperature Control	Mechanical
Pumped Oil Filtration	No
Vat 1 Oil Capacity (volume)	15 l
Ventless Cooking Technology	No
Split Pot	No
Temperature Maximum	190 °C

Lincat reserves the right to modify specifications or discontinue models without incurring obligation. Dimensions nominal.

Document Auto-Generated
March 24, 2025

LINCAT SILVERLINK ELECTRIC COUNTER-TOP SINGLE TANK FRYER - 2 BASKETS - W 450 MM - 9.0 KW

MODEL: DF49

BIDDING SPECIFICATIONS (SHORT FORM SPECS)

Bidding Specifications Not Available.

TECHNICAL DRAWING

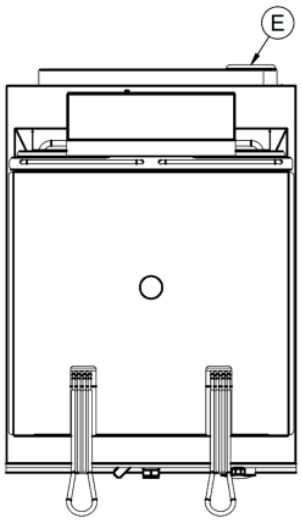

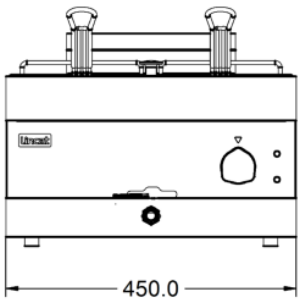

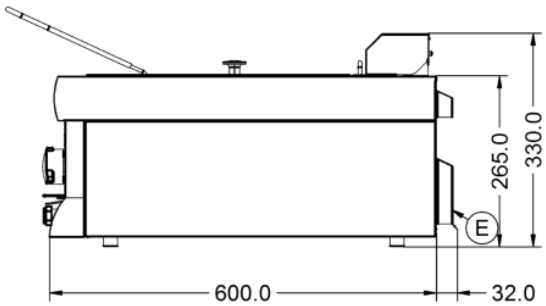

Lincat reserves the right to modify specifications or discontinue models without incurring obligation. Dimensions nominal.

Document Auto-Generated
March 24, 2025