LINCAT SILVERLINK ELECTRIC COUNTER-TOP TWIN TANK FRYER - 2 BASKETS - W 600 MM - 2 X 6.0 KW

MODEL: DF612

AIA FILE NUMBER:

ITEM NUMBER:



SILVERLINK 600

UKFry perfectly crispy and fluffy chips every time with the powerful Silverlink 600 Electric Twin Tank Counter Top Fryer. Twice the tanks means twice the power with this fryer, which is capable of delivering 52kg of chips per hour. Not to mention the greater cooking versatility that twin tanks provide. It's ideal for mobile operations as well as cafes, pubs and restaurants. The fryer features an innovative deep cool zone, which collects cooking debris to prolong the life of the oil and therefore save you money. Sturdy stainless steel means it's built to last, hinged elements give easy access during cleaning, and you're in control via the accurate thermostat throughout the entire cooking process.

PRODUCT OPTIONS AND ACCESSORIES

- BA96 BASKET SPUN DFSMALL
- CC6 Lincat Silverlink 600 Free-standing Ambient Open-Top Pedestal with Doors - W 600 mm
- CN6 Lincat Silverlink 600 Free-standing Ambient Open-Top Pedestal without Doors - W 600 mm
- SLS6 Lincat Silverlink 600 Free-standing Floor Stand - for units W 600 mm
- HC6 Lincat Silverlink 600 Free-standing Heated Open-Top Pedestal with Doors - W 600 mm - 0.5 kW
- HCL6 Lincat Silverlink 600 Free-standing Heated Pedestal with Legs and Doors - W 600 mm - 0.5 kW

PRODUCT FEATURES

- Two independently operated fryer tanks for greater versatility, increased power delivers 52kg of chips per hour
- Front mounted controls for safety
- Hinged elements to give easy access during cleaning
- Cool zone collects cooking debris gives cleaner cooking results and saves money by prolonging the life of the oil
- Thermostatically controlled to give accurate cooking temperatures throughout cooking. Fail safe top temperature cut out ensures safe operation.
- Thermostatically controlled to give accurate cooking temperatures throughout cooking. Fail safe top temperature cut out ensures safe operation.
- Heavy duty nickel plated baskets for the most demanding of operations
- Fully moulded 304 stainless steel tank and heavy duty nickel plated baskets for the most demanding of operations
- Front drain off tap for easy removal of cooking oil

LINCAT SILVERLINK ELECTRIC COUNTER-TOP TWIN TANK FRYER - 2 BASKETS - W 600 MM - 2 X 6.0 KW

MODEL: DF612

WEIGHTS & DIMENSIONS

Product Width	600 mm
Product Depth	632 mm
Product Height	330 mm
Product Dimensions (WxDxH) (mm)	600 Millimeter X 632 Millimeter X 330 Millimeter
Product Weight	25 kg
Product Clearance Required: Top	1,000 mm
Product Clearance Required: Back	100 mm
Product Clearance Required: Left Side	100 mm

SHIPPING DETAILS

Ship Width	70 cm
Ship Depth	70 cm
Ship Height	49.5 cm
Ship Weight	27.5 kg
Ship Method	Small Parcel (Ups Fedex Dhl)
Shipping Package Type	Pieces

PRODUCT CERTIFICATION ICONS

Made in UK UKCA IP33

ENERGY SPECIFICATIONS

Primary Energy Type	Electric
Electrical Volts	230-400V

ADDITIONAL TECHNICAL SPECIFICATIONS

Basket Lift Type	Not Applicable
Food Production Rate	36kg chips - 12mm [frozen], 52kg chips - 12mm [chilled] per hour
Temperature Maximum	190 °C
Total Oil Capacity (volume)	18 l
Vat 1 Oil Capacity (volume)	9 l
Vat 2 Oil Capacity (volume)	9 l

Lincat reserves the right to modify specifications or discontinue models without incurring obligation. Dimensions nominal.

Document Auto-Generated

LINCAT SILVERLINK ELECTRIC COUNTER-TOP TWIN TANK FRYER - 2 BASKETS - W 600 MM - 2 X 6.0 KW

MODEL: DF612

bidding specifications

TECHNICAL DRAWING

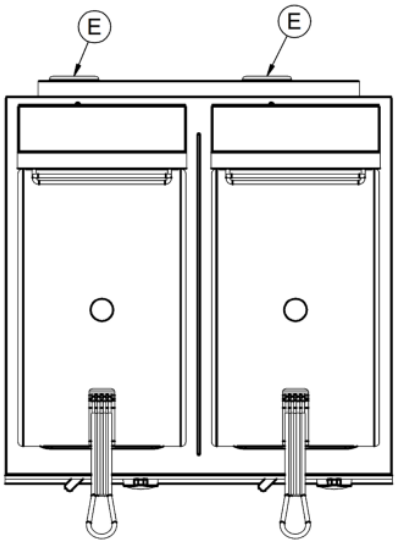

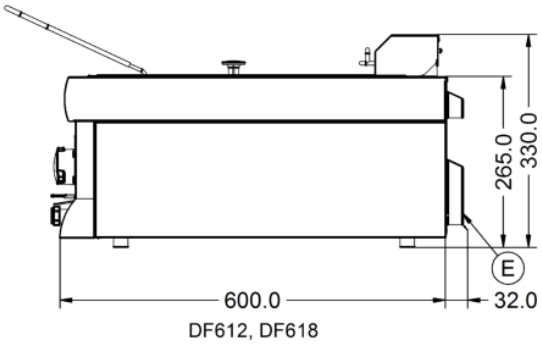

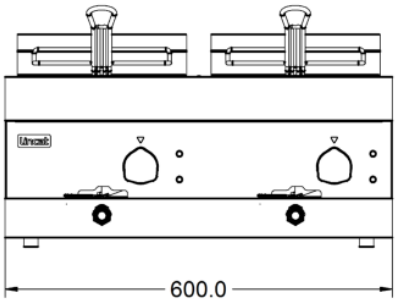

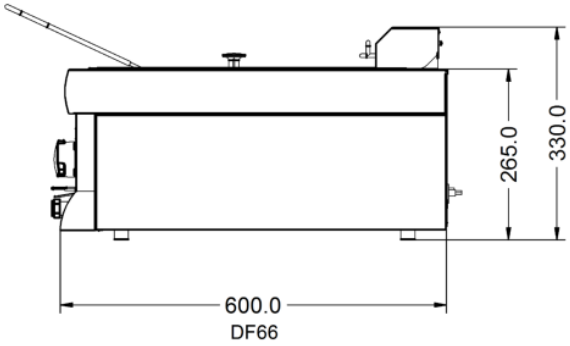

Lincat reserves the right to modify specifications or discontinue models without incurring obligation. Dimensions nominal.

www.lincat.co.uk | p: +44 1522 875500 Whisby Road, Lincoln, LN6 3QZ, UK