LINCAT SILVERLINK ELECTRIC FREE-STANDING OVEN RANGE - CASTORS AT REAR - 6 PLATES - W 900 MM - 13.0 KW [1-PHASE]

MODEL: ESLR9C/SPH

UKCook quality food at volume with the Silverlink 600 Electric Oven Range. With a large capacity oven for increased productivity, the range is perfect for care homes as well as smaller pubs and restaurants. The range comes with six hotplates and a twin fan assisted oven for uniformed heat and consistent cooking. Built to last, the fully pressed and sealed hob tops make the unit easy to clean and maintain.

AIA FILE NUMBER:

ITEM NUMBER:

PRODUCT OPTIONS AND ACCESSORIES

- SLR9/SB SPLASHBACK

PRODUCT FEATURES

- Compact 600mm deep footprint perfect for care homes as well as smaller pubs and restaurants
- Six hotplates (1.5kW each) with six position control knob for each plate higher power for sautéing at the front, lower power to the rear ideal for simmering
- Automatic power reduction, if the pan boils dry or is removed, prolonging hotplate life
- Easy clean fully pressed and sealed hob
- Powerful 4kW fan assisted oven for uniform heat distribution and consistent cooking
- Easy clean fully pressed and sealed hob
- Double insulated doors, side and back panels providing safer operation, greater efficiency and economy
- Castors at rear to enable unit to be pulled out for deeper cleans

LINCAT SILVERLINK ELECTRIC FREE-STANDING OVEN RANGE - CASTORS AT REAR - 6 PLATES - W 900 MM - 13.0 KW [1-PHASE]

MODEL: ESLR9C/SPH

WEIGHTS & DIMENSIONS

Product Width	900 mm
Product Width (nominal)	900 in
Product Depth	670 mm
Product Height	932 mm
Product Dimensions (WxDxH) (mm)	900 Millimeter X 670 Millimeter X 932 Millimeter
Product Weight	95 kg
Product Clearance Required: Top	1,500 mm
Product Clearance Required: Back	100 mm
Product Clearance Required: Left Side	100 mm

SHIPPING DETAILS

Ship Width	100 cm
Ship Depth	81 cm
Ship Height	110 cm
Ship Weight	104.5 kg
Ship Method	Ltl Common Carrier
Shipping Package Type	Pieces

PRODUCT CERTIFICATION ICONS

Made in UK UK CA IP34

ENERGY SPECIFICATIONS

Primary Energy Type	Electric
Electrical Volts	230V

ADDITIONAL TECHNICAL SPECIFICATIONS

Oven Power Rating	4 kW
Oven Temperature Minimum	50 °C
Oven Temperature Maximum	250 °C
Shelf Depth	342 mm
Shelf Width	700 mm

SELECT_COOKING_EQUIPMENT	NUMBER_OF	POWER_RATING	ARRANGE-MENT_LEFT_OR_RIGHT	WIDTH	DEPTH
Electric_Round_Hot_Plate_1	3	2	Center_Front	300 mm	300 mm
Electric_Round_Hot_Plate_2	3	1.5	Center_Rear	300 mm	300 mm

Lincat reserves the right to modify specifications or discontinue models without incurring obligation. Dimensions nominal.

Document Auto-Generated

LINCAT SILVERLINK ELECTRIC FREE-STANDING OVEN RANGE - CASTORS AT REAR - 6 PLATES - W 900 MM - 13.0 KW [1-PHASE]

MODEL: ESLR9C/SPH

SELECT_BASE_EQUIPMENT	NUMBER_OF	CAPACITY	WIDTH	DEPTH	HEIGHT
Standard_Oven_1			725 mm	342 mm	428 mm

bidding specifications

Lincat reserves the right to modify specifications or discontinue models without incurring obligation. Dimensions nominal.

Document Auto-Generated

LINCAT SILVERLINK ELECTRIC FREE-STANDING OVEN RANGE - CASTORS AT REAR - 6 PLATES - W 900 MM - 13.0 KW [1-PHASE]

MODEL: ESLR9C/SPH

TECHNICAL DRAWING

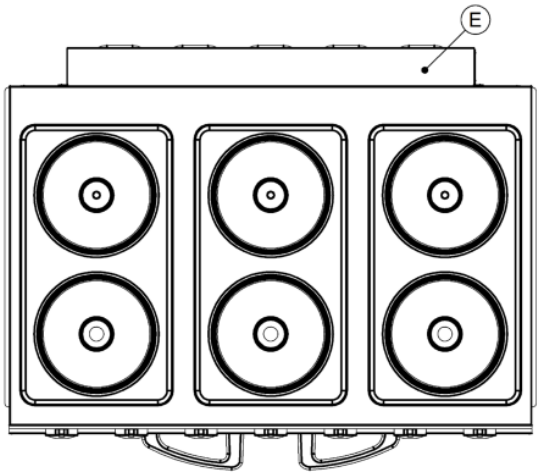

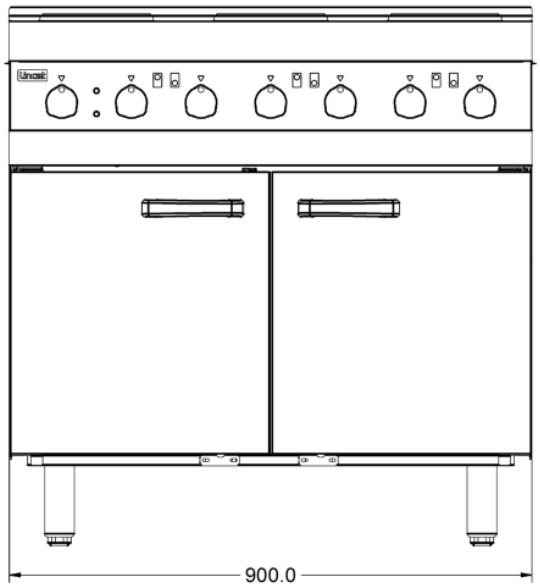

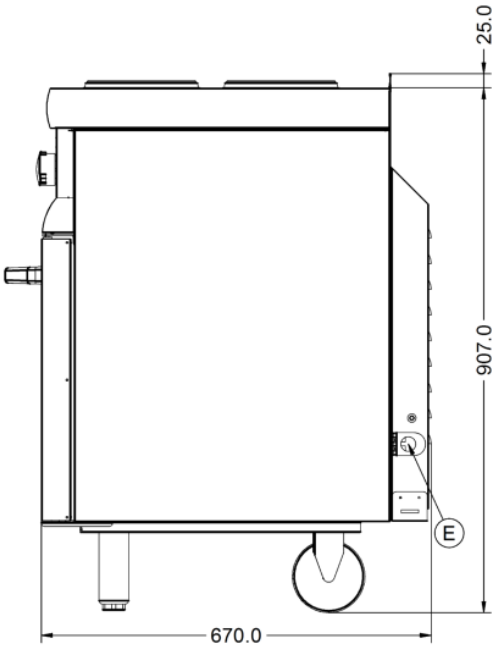

Lincat reserves the right to modify specifications or discontinue models without incurring obligation. Dimensions nominal.

Document Auto-Generated