LINCAT LYNX ELECTRIC COUNTER-TOP HEAVY DUTY CONTACT GRILL - SMOOTH UPPER & LOWER PLATES - W 395 MM - 3.0 KW

MODEL: GG1

AIA FILE NUMBER:

ITEM NUMBER:



UKLock in maximum flavour with the 3kW Lynx 400 Contact Grill. Designed to seal in the juices, the quick-heating grill produces mouthwatering results every time, whether you're making toasted sandwiches or grilling succulent meats. Perfect for cafes and pubs, the compact yet sturdy grill is high-powered and delivers greater capacity during busy periods. Featuring smooth plates on the top and bottom for an even colour, the grill is designed to plug in and play, so you'll be delivering delicious dishes in no time.

PRODUCT OPTIONS AND ACCESSORIES

- OS1 OMELETTE SPACER - FOR GG1
- SS1 SANDWICH SPACER - FOR GG1

PRODUCT FEATURES

- Heavy duty, higher powered griddle
- Smooth plates top and bottom for an even colour
- Higher capacity for increased output in busy periods
- Ideal for front of house use
- Great for sealing in juices and flavour for succulent results and minimal shrinkage
- Cast aluminium plates give an even heat distribution
- Non stick coated plates for easy cleaning
- Plug and play for an easy installation

LINCAT LYNX ELECTRIC COUNTER-TOP HEAVY DUTY CONTACT GRILL - SMOOTH UPPER & LOWER PLATES - W 395 MM - 3.0 KW

MODEL: GG1

WEIGHTS & DIMENSIONS

Product Width	395 mm
Product Depth	356 mm
Product Height	276 mm
Product Dimensions (WxDxH) (mm)	395 Millimeter X 356 Millimeter X 276 Millimeter

SHIPPING DETAILS

Ship Width	48.5 cm
Ship Depth	48.5 cm
Ship Height	42 cm
Ship Weight	25.41 kg
Ship Method	Small Parcel (Ups Fedex Dhl)
Shipping Package Type	Pieces
Shipping Origin Zip Code	LN6 3QZ, UNITED KINGDOM

PRODUCT CERTIFICATION ICONS

IP23 UK CA Made in UK

ENERGY SPECIFICATIONS

Primary Energy Type	Electric
Electrical Volts	230V

bidding specifications

Lincat reserves the right to modify specifications or discontinue models without incurring obligation. Dimensions nominal.

www.lincat.co.uk | p: +44 1522 875500 Lincat Whisby Road, Lincoln, LN6 3QZ, UK

LINCAT LYNX ELECTRIC COUNTER-TOP HEAVY DUTY CONTACT GRILL - SMOOTH UPPER & LOWER PLATES - W 395 MM - 3.0 KW

MODEL: GG1

TECHNICAL DRAWING

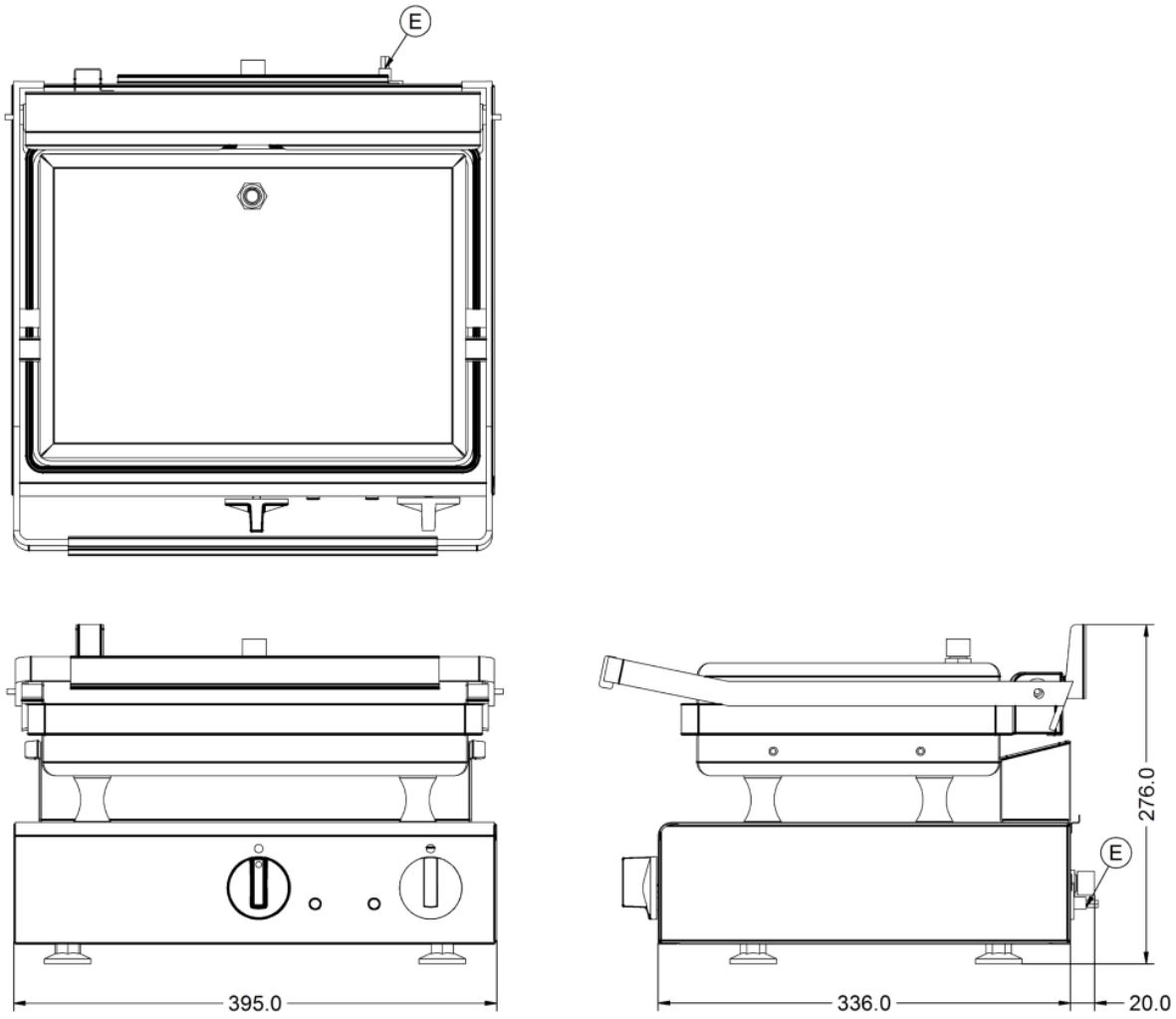

Lincat reserves the right to modify specifications or discontinue models without incurring obligation. Dimensions nominal.

Document Auto-Generated