LINCAT SILVERLINK NATURAL GAS COUNTER-TOP SALAMANDER GRILL - W 600 MM - 5.0 KW

MODEL: GR3/N

AIA FILE NUMBER:

ITEM NUMBER:



SILVERLINK 600

UKSometimes during fast turnaround times, you need to be able to toast and grill at speed. The Silverlink 600 Gas Salamander Grill is ideal for these scenarios. Perfect for any modestly-sized, fast-paced restaurant, pub or takeaway, the grill boasts powerful ceramic plaque burners for rapid heat up, with five shelf positions to give maximum flexibility for all catering operations. Easy to clean, it also comes with a chrome wire shelf to allow trays and food to be placed on for cooking. Producing perfectly grilled meat, fish, and toast has never been as simple or stress-free.

PRODUCT OPTIONS AND ACCESSORIES

- GR3/BS BENCH STAND FOR GR3 - H410,D350,W605
- ABP03 BRANDING PLATE KIT
- CH01 CATERFLEX HOSE 1/2" 1 METRE
- CH02 CATERFLEX HOSE 1/2" 1.5 METRE
- GR3/FS FLOOR STAND FOR GR3 - H1260,D350,W605
- GR3/WS WALL SHELF FOR GR3

PRODUCT FEATURES

- Powerful ceramic plaque burners for rapid heat up
- 5 shelf positions to give maximum flexibility for all catering operations
- Chrome wire shelf to allow trays and food to be placed on for cooking
- Cool touch handles for safety
- Enamelled interior and hood for easy cleaning
- Removable crumb tray, making it effortless to keep clean

LINCAT SILVERLINK NATURAL GAS COUNTER-TOP SALAMANDER GRILL - W 600 MM - 5.0 KW

MODEL: GR3/N

WEIGHTS & DIMENSIONS

Product Width	600 mm
Product Depth	423 mm
Product Height	408 mm
Product Dimensions (WxDxH) (mm)	600 Millimeter X 423 Millimeter X 408 Millimeter
Product Weight	20 kg
Product Clearance Required: Top	1,000 mm
Product Clearance Required: Back	50 mm
Product Clearance Required: Left Side	50 mm

SHIPPING DETAILS

Ship Width	70 cm
Ship Depth	55 cm
Ship Height	49.5 cm
Ship Weight	22.55 kg
Ship Method	Small Parcel (Ups Fedex Dhl)
Shipping Package Type	Pieces

PRODUCT CERTIFICATION ICONS

UK CA Made in UK

ENERGY SPECIFICATIONS

Primary Energy Type	Gas
Electrical Total Wattage	5,000
Electrical Kilowatts	5

ADDITIONAL TECHNICAL SPECIFICATIONS

Cooking Area Plate Depth	225
Cooking Area Plate Width	410

bidding specifications

Lincat reserves the right to modify specifications or discontinue models without incurring obligation. Dimensions nominal.

Document Auto-Generated

LINCAT SILVERLINK NATURAL GAS COUNTER-TOP SALAMANDER GRILL - W 600 MM - 5.0 KW

MODEL: GR3/N

TECHNICAL DRAWING

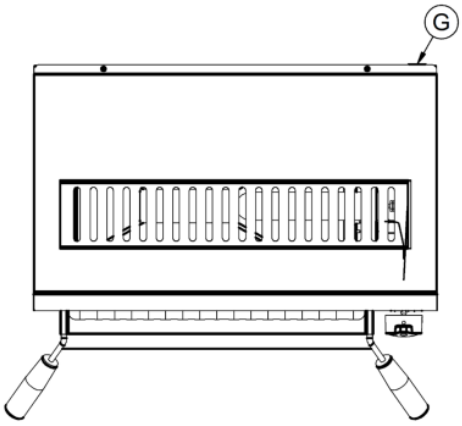

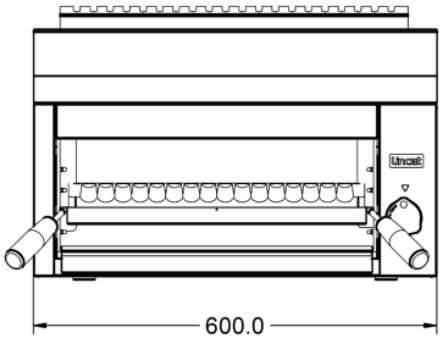

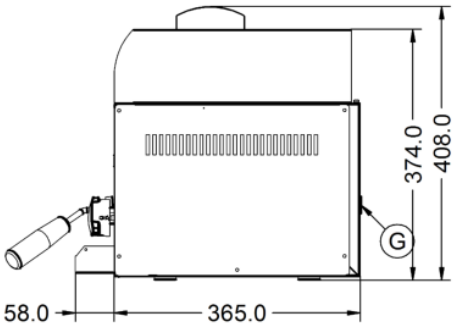

Lincat reserves the right to modify specifications or discontinue models without incurring obligation. Dimensions nominal.

Document Auto-Generated