LINCAT SILVERLINK NATURAL GAS COUNTER-TOP GRIDDLE - HALF-RIBBED PLATE - W 750 MM - 7.5 KW

MODEL: GS7R/N

AIA FILE NUMBER:

ITEM NUMBER:



SILVERLINK 600

UKThe Silverlink 600 Gas Griddle is a reliable choice for cooking eggs, bacon, burgers, or vegetables. Its durable 12 mm thick steel plate ensures even heat distribution and easy cleaning. With piezo ignition for quick burner lighting, it offers convenience. With two independently controlled heat zones, you can choose to operate one zone during quiet times. The half smooth, half ribbed plate adds flexibility, creating attractive branding lines on food and enabling egg cooking on the smooth surface. Ideal for cafes, pubs, and restaurants, its thermostatic control ensures accurate temperatures, delivering consistent and delicious results.

PRODUCT OPTIONS AND ACCESSORIES

- SB7 750 GRIDDLE SPLASHB
- CH01 CATERFLEX HOSE 1/2" 1 METRE
- CH02 CATERFLEX HOSE 1/2" 1.5 METRE
- CN7 Lincat Silverlink 600 Free-standing Ambient Open-Top Pedestal without Doors - W 750 mm
- SLS7 Lincat Silverlink 600 Free-standing Floor Stand - for units W 750 mm

PRODUCT FEATURES

- Flexibility of a half smooth, half ribbed plate to give attractive branding lines to your food whilst being able to cook eggs on the smooth half of the plate. 12 mm thick machined steel plate providing even heat distribution and an easy to clean surface
- Thermostatically controlled to give accurate temperatures during the cooking process for consistent results
- Two separately controlled heat zones give you the option of operating either zone independently to provide a smaller cooking area during quiet periods as well as offering versatility when cooking two separate meals simultaneously
- The plate is fully welded into the frame to prevent leaks and places where food and carbon can build up
- Front mounted control for easy of use during cooking
- Piezo ignition for easy lighting of the burners
- Flame failure device for maximum safety

LINCAT SILVERLINK NATURAL GAS COUNTER-TOP GRIDDLE - HALF-RIBBED PLATE - W 750 MM - 7.5 KW

MODEL: GS7R/N

WEIGHTS & DIMENSIONS

Product Width	750 mm
Product Depth	650 mm
Product Height	415 mm
Product Dimensions (WxDxH) (mm)	750 Millimeter X 650 Millimeter X 415 Millimeter
Product Weight	54 kg
Product Clearance Required: Top	750 mm
Product Clearance Required: Back	50 mm
Product Clearance Required: Left Side	50 mm

SHIPPING DETAILS

Ship Width	85.5 cm
Ship Depth	70 cm
Ship Height	63.5 cm
Ship Weight	59.4 kg
Ship Method	Small Parcel (Ups Fedex Dhl)
Shipping Package Type	Pieces

PRODUCT CERTIFICATION ICONS

ENERGY SPECIFICATIONS

Primary Energy Type	Gas
Electrical Kilowatts	7.5

ADDITIONAL TECHNICAL SPECIFICATIONS

Cooking Area Plate Depth	405
Cooking Area Plate Width	712
Number of Burners	2

bidding specifications

Lincat reserves the right to modify specifications or discontinue models without incurring obligation. Dimensions nominal.

Document Auto-Generated

LINCAT SILVERLINK NATURAL GAS COUNTER-TOP GRIDDLE - HALF-RIBBED PLATE - W 750 MM - 7.5 KW

MODEL: GS7R/N

TECHNICAL DRAWING

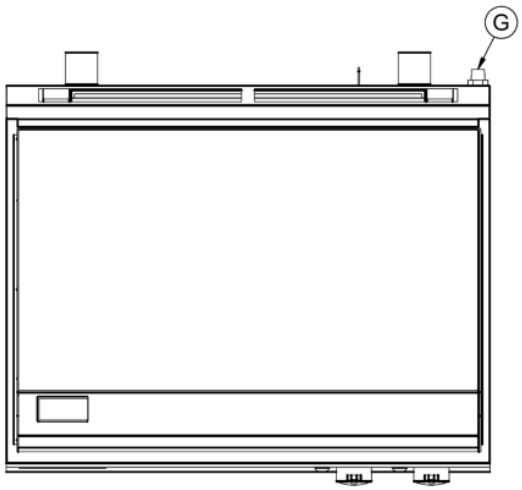

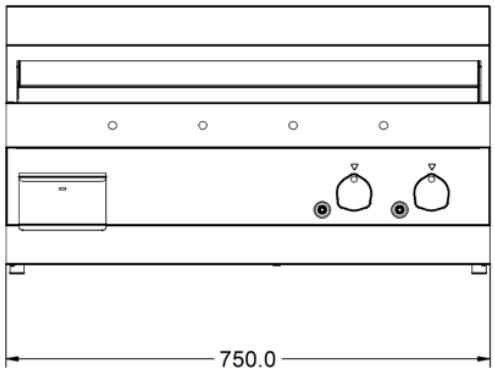

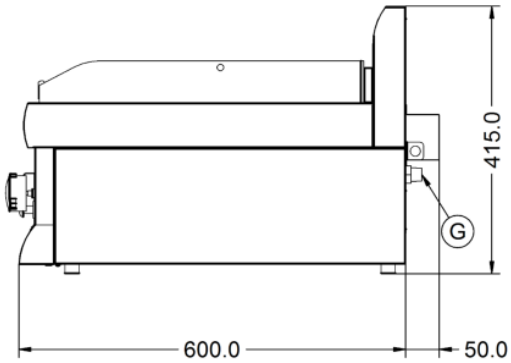

Lincat reserves the right to modify specifications or discontinue models without incurring obligation. Dimensions nominal.

Document Auto-Generated