LINCAT SPECIALIST ELECTRIC COUNTER-TOP INDUCTION HOB - 1 ZONE - W 400 MM - 2.4 KW

MODEL: IH3

AIA FILE NUMBER:

ITEM NUMBER:



Lincat Specialist

UKEmbrace the power and energy saving capabilities of the 2.4kW Lincat Single Zone Induction Hob. The energy efficient induction process delivers 90% efficiency compared to a typical gas hob at 50%, while ventilation and air conditioning costs can also be reduced as the heat is generated in the pan rather than the hob surface. Lightweight and portable, the hob is versatile and can be equally beneficial for both kitchen and event catering. The hob's single zone provides twice the power of a gas hob and also comes with a boost function when even more power is required. Built for safety, the hob also comes with a pan detection function which cuts power when no pan is present, cutting running costs and creating a safer, more comfortable

PRODUCT FEATURES

- Highly responsive and controllable cooking method.
- High power delivers almost twice the cooking power of a similarly rated gas hob, whilst saving energy
- Boost function delivers power when it's most needed
- Portable, plug in device easy to move around the kitchen and ideal for event catering. Functional and attractive profile is perfect for front of house theatre style
- Pan detection function cuts power when no pan is present, cutting running costs and creating a safer, more comfortable working environment.
- Automatic heat up function switches to a preset power level after full power heat up 6mm thick high impact resistant ceramic glass ceramic surface will withstand hard knocks and is easy to clean
- Easy to use rotary controls complete with LED display of power level. Easy to change filter, built into the base of the unit. Powerful internal cooling fan and overheat protection for long service life

LINCAT SPECIALIST ELECTRIC COUNTER-TOP INDUCTION HOB - 1 ZONE - W 400 MM - 2.4 KW

MODEL: IH3

WEIGHTS & DIMENSIONS

Product Width	400 mm
Product Depth	654 mm
Product Height	115 mm
Product Dimensions (WxDxH) (mm)	400 Millimeter X 654 Millimeter X 115 Millimeter

SHIPPING DETAILS

Ship Width	70 cm
Ship Depth	55 cm
Ship Height	25 cm
Ship Weight	13.86 kg
Ship Method	Small Parcel (Ups Fedex Dhl)
Shipping Package Type	Pieces

PRODUCT CERTIFICATION ICONS

UK CA Made in UK IP24

ENERGY SPECIFICATIONS

Primary Energy Type	Electric
Electrical Volts	230V

SELECT_COOKING_EQUIPMENT	NUMBER_OF	POWER_RATING	ARRANGE-MENT_LEFT_OR_RIGHT	WIDTH	DEPTH
Induction_Burner	1	2.4kw	Center	180 mm	180 mm

bidding specifications

Lincat reserves the right to modify specifications or discontinue models without incurring obligation. Dimensions nominal.

Document Auto-Generated

LINCAT SPECIALIST ELECTRIC COUNTER-TOP INDUCTION HOB - 1 ZONE - W 400 MM - 2.4 KW

MODEL: IH3

TECHNICAL DRAWING

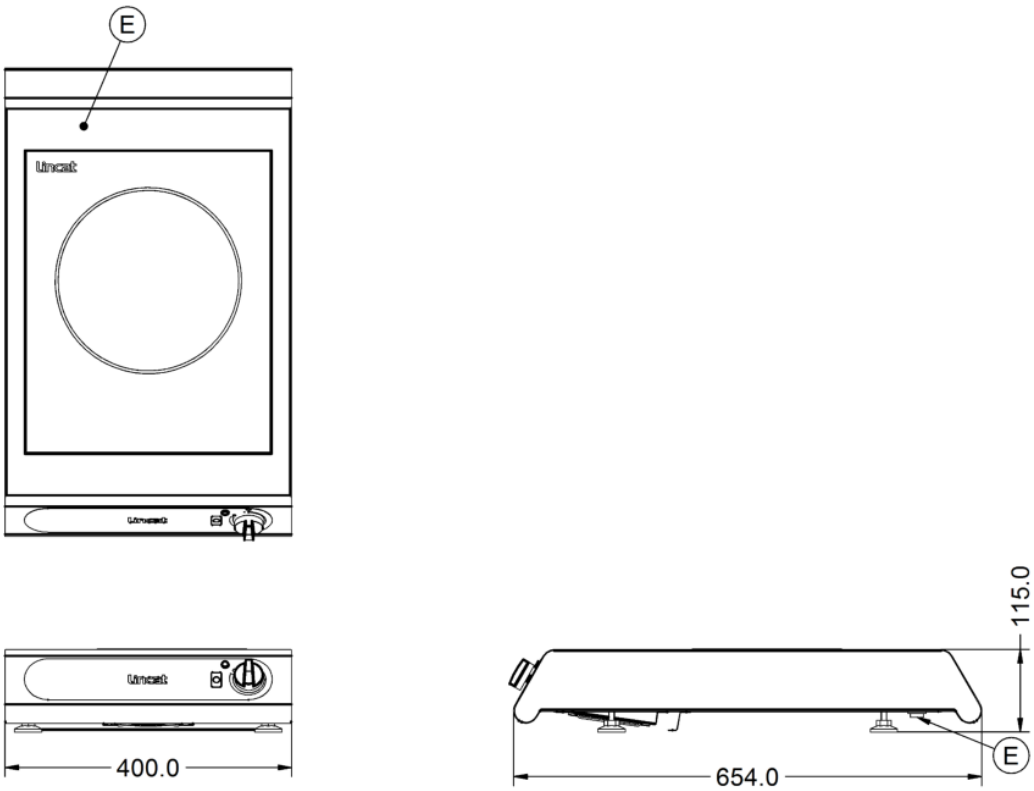

Lincat reserves the right to modify specifications or discontinue models without incurring obligation. Dimensions nominal.

Document Auto-Generated