LINCAT SILVERLINK NATURAL GAS FREE-STANDING TWIN TANK FRYER - 2 BASKETS - W 600 MM - 24.0 KW

MODEL: J10/N

AIA FILE NUMBER:

ITEM NUMBER:



SILVERLINK 600

UKDeliver perfectly crisp on the outside and fluffy on the inside chips time after time with the Silverlink 600 Free Standing Gas Fryer. Twin tanks and twin baskets means you have the flexibility to cook different foods or loads simultaneously, while delivering 46kg of chips an hour. Ideal for cafes, pubs and restaurants, the fryer features piezo ignition for easy lighting and heavy duty nickel plated baskets for the most demanding of operations. You're in control via the accurate thermostat throughout the entire cooking process. Then there's the innovative deep cool zone, which collects cooking debris to prolong the life of the oil and therefore save you money.

PRODUCT FEATURES

- Double tank twin basket operation giving you the flexibility to cook different foods or loads simultaneously, delivering 46kg of chips an hour
- Thermostatically controlled to give accurate cooking temperatures throughout cooking. Flame failure device and top temperature cut out ensures safe operation.
- Cool zone collects cooking debris gives cleaner cooking results and saves money by prolonging the life of the oil
- Piezo ignition for easy lighting
- Heavy duty nickel plated baskets for the most demanding of operations
- Internal drain off tap for easy removal of cooking oil

LINCAT SILVERLINK NATURAL GAS FREE-STANDING TWIN TANK FRYER - 2 BASKETS - W 600 MM - 24.0 KW

MODEL: J10/N

WEIGHTS & DIMENSIONS

Product Width	600 mm
Product Depth	690 mm
Product Height	1,060 mm
Product Dimensions (WxDxH) (mm)	600 Millimeter X 690 Millimeter X 1060 Millimeter
Product Weight	73 kg
Product Clearance Required: Top	1,000 mm
Product Clearance Required: Back	50 mm
Product Clearance Required: Left Side	50 mm

SHIPPING DETAILS

Ship Width	81.3 cm
Ship Depth	68.5 cm
Ship Height	122 cm
Ship Weight	81.07 kg
Ship Method	Ltl Common Carrier
Shipping Package Type	Pieces

PRODUCT CERTIFICATION ICONS

UK CA Made in UK

ENERGY SPECIFICATIONS

Primary Energy Type	Gas

ADDITIONAL TECHNICAL SPECIFICATIONS

Basket Lift Type	Not Applicable
Food Production Rate	36kg chips -12mm [frozen], 46kg chips - 12mm [chilled] per hour
Number of Burners	4
Temperature Maximum	190 °C
Total Oil Capacity (volume)	24 l
Vat 1 Oil Capacity (volume)	12 l
Vat 2 Oil Capacity (volume)	12 l

bidding specifications

Lincat reserves the right to modify specifications or discontinue models without incurring obligation. Dimensions nominal.

Document Auto-Generated

LINCAT SILVERLINK NATURAL GAS FREE-STANDING TWIN TANK FRYER - 2 BASKETS - W 600 MM - 24.0 KW

MODEL: J10/N

TECHNICAL DRAWING

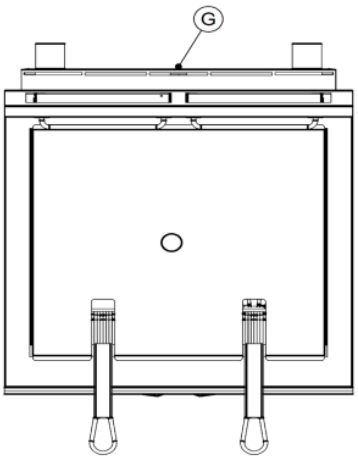

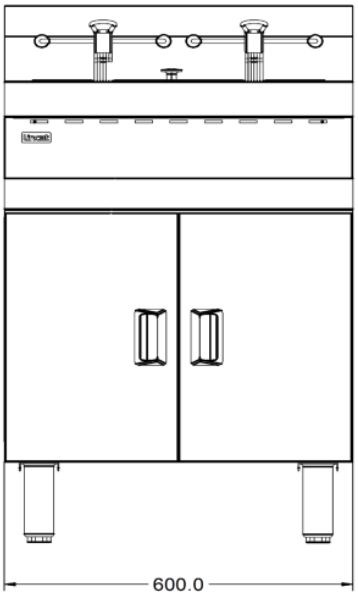

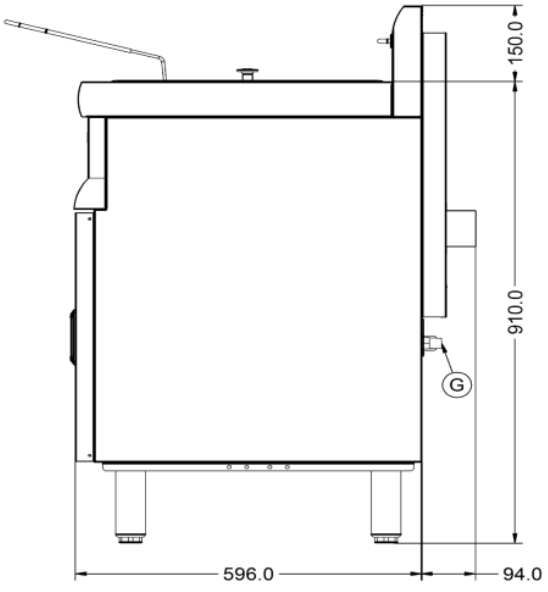

Lincat reserves the right to modify specifications or discontinue models without incurring obligation. Dimensions nominal.

Document Auto-Generated