LINCAT LYNX ELECTRIC COUNTER-TOP BOILING TOP - SINGLE PLATE - W 285 MM - 2.0 KW

MODEL: LBR

AIA FILE NUMBER:

ITEM NUMBER:



LYNX400

UKPerfect for use both in-kitchen and in buffet and mobile catering operations, the 2kW Single Plate Boiling Top is quick, with variable heat control. Built to last, the unit features automatic power reduction if a pan boils dry or is removed, prolonging the life of the hotplate. The fully pressed and sealed hob tops also make the unit easy to clean and maintain.

PRODUCT FEATURES

- Compact and hard wearing boiling top, ideal for the kitchen and for use in buffet and mobile catering operations.
- 2kW single plate for fastest performance
- Automatic power reduction, if pan boils dry or is removed - prolonging hotplate life
- Variable heat control
- Fully pressed and sealed hob tops make the unit easy to clean and maintain

LINCAT LYNX ELECTRIC COUNTER-TOP BOILING TOP - SINGLE PLATE - W 285 MM - 2.0 KW

MODEL: LBR

WEIGHTS & DIMENSIONS

Product Width	285 mm
Product Depth	400 mm
Product Height	120 mm
Product Dimensions (WxDxH) (mm)	285 Millimeter X 400 Millimeter X 120 Millimeter
Product Weight	5 kg
Product Clearance Required: Top	1,000 mm
Product Clearance Required: Back	100 mm
Product Clearance Required: Left Side	100 mm

SHIPPING DETAILS

Ship Width	48 cm
Ship Depth	38 cm
Ship Height	42 cm
Ship Weight	5.83 kg
Ship Method	Small Parcel (Ups Fedex Dhl)
Shipping Package Type	Pieces

PRODUCT CERTIFICATION ICONS

Made in UK UKCA IP23

ENERGY SPECIFICATIONS

Primary Energy Type	Electric
Electrical Volts	230V

SELECT_COOKING_EQUIPMENT	NUMBER_OF	POWER_RATING	ARRANGE-MENT_LEFT_OR_RIGHT	WIDTH	DEPTH
Hot_Plate	1		Center	180 mm	180 mm

bidding specifications

Lincat reserves the right to modify specifications or discontinue models without incurring obligation. Dimensions nominal.

Document Auto-Generated

LINCAT LYNX ELECTRIC COUNTER-TOP BOILING TOP - SINGLE PLATE - W 285 MM - 2.0 KW

MODEL: LBR

TECHNICAL DRAWING

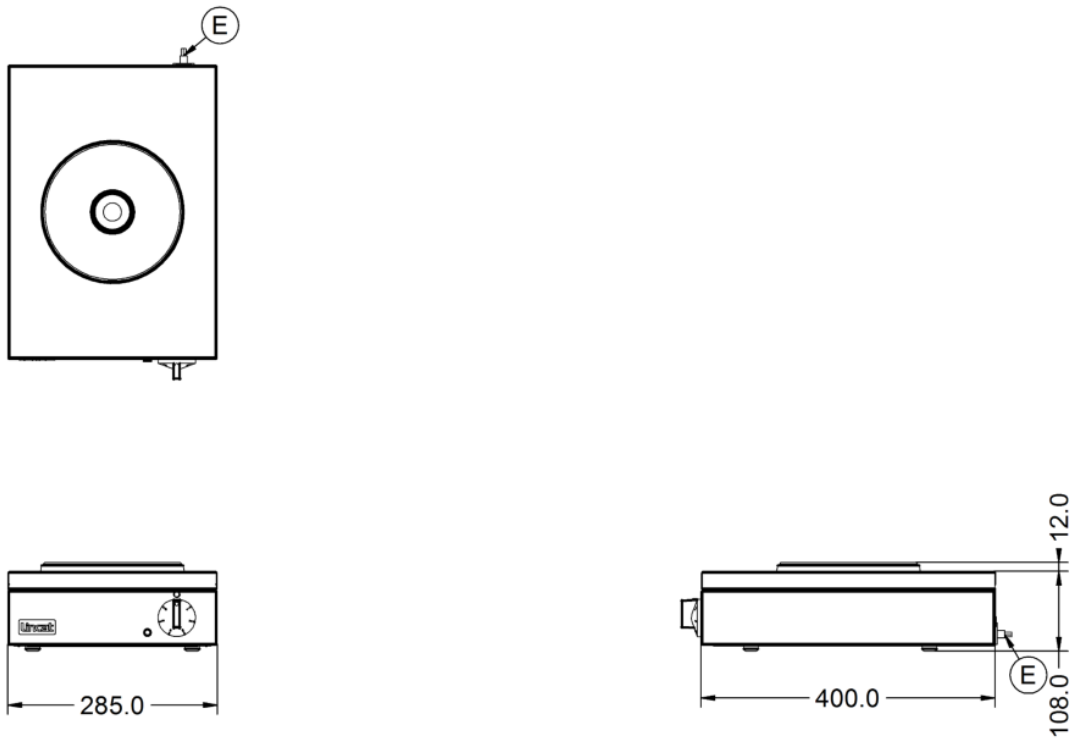

Lincat reserves the right to modify specifications or discontinue models without incurring obligation. Dimensions nominal.

Document Auto-Generated