LINCAT LYNX ELECTRIC COUNTER-TOP TWIN CONTACT GRILL - SMOOTH UPPER & LOWER PLATES - W 623 MM - 4.5 KW

MODEL: LCG2



UKHeat food rapidly and seal in all the juices and flavour with the Twin-Head 2 x 2.25kW Lynx 400 Electric Contact Grill with smooth plates. Ideal for paninis and toasted sandwiches as well as meats and egg dishes, the grill heats from above and below for balanced cooking. Designed to plug and play, you'll be producing delicious meals in no time. The smooth enamelled cast iron plates give excellent heat retention and are easy to clean, while there's also a thermostatic control for accurate, repeatable results. Perfect for cafes and pubs serving toasted sandwiches and light meals.

AIA FILE NUMBER:

ITEM NUMBER:

PRODUCT OPTIONS AND ACCESSORIES

- OS2 OMELETTE SPACER - FOR LCG, LCG2, LPG, LPG2, LRG, LRG2

PRODUCT FEATURES

- Twin head model with smooth plates
- ideal where space is limited
- Fast heat up from cold
- Enamelled cast iron plates give excellent heat retention and are easy to clean
- 1 kW element in upper plate and 1.25 kW in lower plate gives balanced cooking no need to turn food
- Thermostatic control for accurate repeatable results
- Ideal for fast cooking of meat products
- Well balanced, smooth action mechanism with positive "park" position for safe and easy operation
- Supplied with two cables and two plugs for easy installation

Whisby Road, Lincoln, LN6 3QZ, UK
www.lincat.co.uk | p: +44 1522 875500

LINCAT LYNX ELECTRIC COUNTER-TOP TWIN CONTACT GRILL - SMOOTH UPPER & LOWER PLATES - W 623 MM - 4.5 KW

MODEL: LCG2

WEIGHTS & DIMENSIONS

Product Width	623 mm
Product Depth	400 mm
Product Height	182 mm
Product Dimensions (WxDxH) (mm)	623 Millimeter X 400 Millimeter X 182 Millimeter

SHIPPING DETAILS

Ship Width	73 cm
Ship Depth	61 cm
Ship Height	36 cm
Ship Weight	42.35 kg
Ship Method	Small Parcel (Ups Fedex Dhl)
Shipping Package Type	Pieces

PRODUCT CERTIFICATION ICONS

Made in UK UK CA IP23

ENERGY SPECIFICATIONS

Primary Energy Type	Electric
Electrical Total Amperage	19.6 A
Electrical Total Wattage	4,500 W
Electrical Kilowatts	4.5 kW

bidding specifications

Lincat reserves the right to modify specifications or discontinue models without incurring obligation. Dimensions nominal.

Document Auto-Generated

LINCAT LYNX ELECTRIC COUNTER-TOP TWIN CONTACT GRILL - SMOOTH UPPER & LOWER PLATES - W 623 MM - 4.5 KW

MODEL: LCG2

TECHNICAL DRAWING

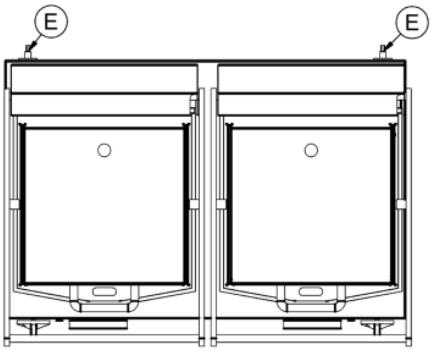

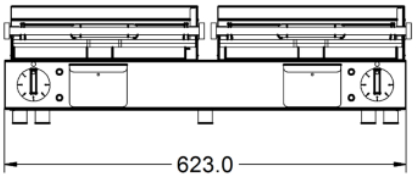

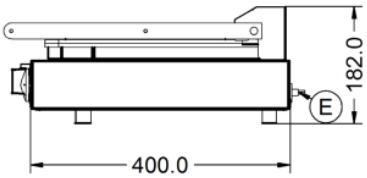

Lincat reserves the right to modify specifications or discontinue models without incurring obligation. Dimensions nominal.

Document Auto-Generated