MODEL: LCS110



Lincat CombiSlim

UK

Measuring just 513mm wide and accommodating 10 full size 1/1 gastronorm, the oven is perfect for front of house and compact kitchens where space is limited but high output and consistent results are needed or for satellite kitchens in combination with our Invoq ovens.

AIA FILE NUMBER:

ITEM NUMBER:

PRODUCT FEATURES

- CombiSlim provides maximum flexibility in minimum space 513mm wide footprint
- Accommodates 6 1/1GN trays
- Consistent regardless of the operator
- Steam injection
- SmartChef® pre-set recipes
- Easy to use SmartTouch®, intuitive touch control display
- CombiSmart® 10 steps, humidity control
- Available with a Hoodini ventless hood
- Temperature Probe HACCP monitoring
- Open Kitchen connects your equipment to the cloud, offering real-time, automated monitoring, predictive maintenance, over-the-air updates, and operational insights. Open Kitchen enhances efficiency, reduces downtime, and optimizes performance.

LINCAT COMBISLIM 1.1

MODEL: LCS110

WEIGHTS & DIMENSIONS

Product Depth	811 mm
Product Height	948 mm
Product Weight	81 kg

SHIPPING DETAILS

Ship Width	60 cm
Ship Depth	95 cm
Ship Height	110 cm
Ship Weight	95 kg
Shipping Package Type	Pieces

WATER, PLUMBING, AND DRAINAGE SPECIFICATIONS

Water Inlet Size	0.75 in
Water Inlet Pressure Minimum	2.5 Bar
Water Inlet Pressure Maximum	6 Bar

PRODUCT CERTIFICATION ICONS

CE IPX4 ENERGY STAR

ENERGY SPECIFICATIONS

Primary Energy Type	Electric
Electrical Volts	400V

ADDITIONAL TECHNICAL SPECIFICATIONS

Cooking Chamber Width	402 mm
Cooking Chamber Depth	629 mm
Cooking Chamber Height	551 mm
Oven Size (volume)	4.9 ft^3
Temperature Minimum	30 °C
Temperature Maximum	300 °C

bidding specifications

Lincat reserves the right to modify specifications or discontinue models without incurring obligation. Dimensions nominal.

Document Auto-Generated

MODEL: LCS110

TECHNICAL DRAWING

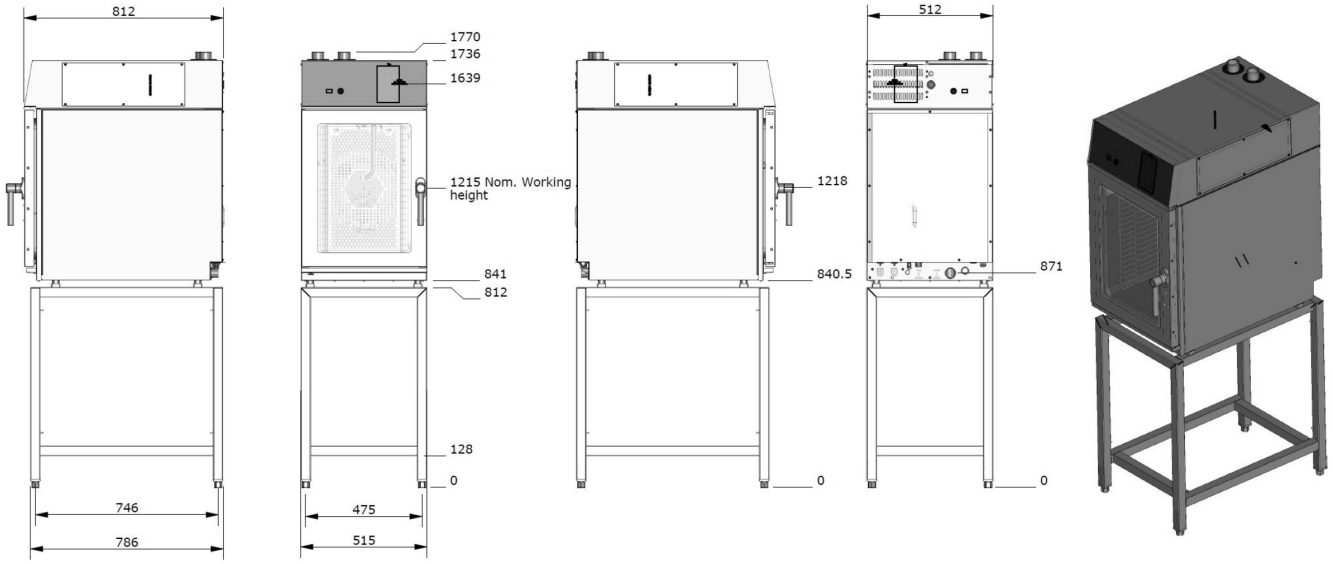

Lincat reserves the right to modify specifications or discontinue models without incurring obligation. Dimensions nominal.

www.lincat.co.uk | p: +44 1522 875500 Whisby Road, Lincoln, LN6 3QZ, UK