LINCAT LYNX ELECTRIC COUNTER-TOP CHIP SCUTTLE - W 285 MM - 0.25 KW

MODEL: LCS



UKEnsure your chips and other fried food are kept at the optimum temperature with the Lynx 400 Chip Scuttle. Great for schools, colleges, restaurants, hotels and cafes, the compact and sturdy scuttle is heated from below and comes with an adjustable temperature control. Designed to plug in and play, the scuttle features perforated drain plates, which ensure any excess oil is drained away.

PRODUCT FEATURES

- Provide a continuous supply of chips and other fried food, quickly and easily
- The perforated drain plates ensures any excess oil is drained away, helping to keep chips crisp
- Adjustable temperature control
- Easy to clean removable drain plates and interior
- No installation required, just plug in.

AIA FILE NUMBER:

ITEM NUMBER:

LINCAT LYNX ELECTRIC COUNTER-TOP CHIP SCUTTLE - W 285 MM - 0.25 KW

MODEL: LCS

WEIGHTS & DIMENSIONS

Product Width	285 mm
Product Depth	400 mm
Product Height	232 mm
Product Dimensions (WxDxH) (mm)	285 Millimeter X 400 Millimeter X 232 Millimeter

SHIPPING DETAILS

Ship Width	48 cm
Ship Depth	38 cm
Ship Height	42 cm
Ship Weight	7.37 kg
Ship Method	Small Parcel (Ups Fedex Dhl)
Shipping Package Type	Pieces

PRODUCT CERTIFICATION ICONS

Made in UK UKCA IP23

ENERGY SPECIFICATIONS

Primary Energy Type	Electric
Electrical Volts	230V

bidding specifications

Lincat reserves the right to modify specifications or discontinue models without incurring obligation. Dimensions nominal.

Document Auto-Generated

LINCAT LYNX ELECTRIC COUNTER-TOP CHIP SCUTTLE - W 285 MM - 0.25 KW

MODEL: LCS

TECHNICAL DRAWING

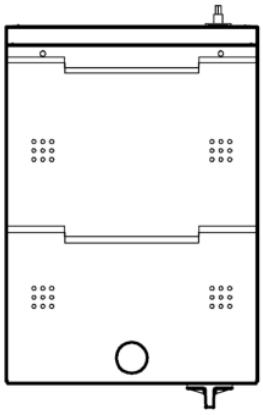

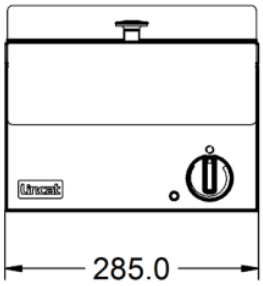

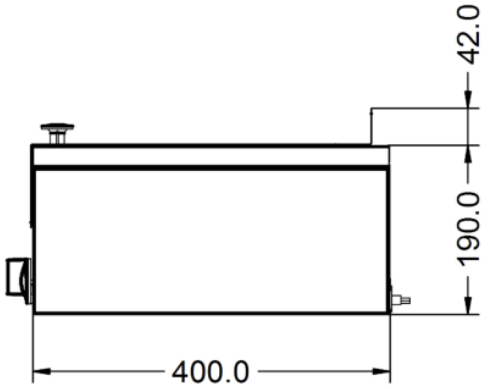

Lincat reserves the right to modify specifications or discontinue models without incurring obligation. Dimensions nominal.

Document Auto-Generated